Improving Cycle Time of Returnable Packaging Logistics Management in a Philippine Automotive Manufacturing Plant

Bryan Jay O. Capistrano [1], Rhodora N. Buluran [2]
Master of Science in Industrial Engineering and Management
Polytechnic University of the Philippines-Graduate School
Marcelo H. Del Pilar Campus, Santa Mesa, Manila 1016, Philippines
bryanjaycapistrano@live.com, rhodora.buluran@yahoo.com

Abstract

The car industry in the Philippines has been booming for the last five years. The country ranked ninth in the largest number of registered passenger cars across the Asia-Pacific region, and in 2019 sold around 273.4 thousand vehicles. Relative to this, local customers pay an average of 1.0 to 1.3 million Philippine pesos for a motor car. The company in the study is an automobile assembly plant, responsible for sales and distribution of automobiles and parts locally, and in other ASEAN countries. This research was conducted to find out, what affects the cycle time of returnable packaging logistics materials. The study employed primary and secondary data. Primary data were obtained through the deployment of the survey questionnaire, which was based on the Cycle-Time Improvement Guidebook – Partnering for Total Quality by Kanagal (1992); secondary data were provided by the company information system. Respondents of the survey were one hundred and sixty-one (161) team members, from manager to interns, who were actively working at the time of the study at the Returnable Packaging Logistics Operation. Percentage and weighted mean were used to compute data. Findings showed that the team members need periodic education through training and skills upgrade to align to Industry 4.0 concepts while providing process improvement activities to improve the operation's cycle time. Furthermore, the current information system of the organization needs to be upgraded with technology that can provide a proactive approach to the operation.

Keywords
Returnable Packaging, Cycle Time, Predictive Data Analytics, Information Technology, Industry 4.0.

1. Introduction

1.1 Background of the Study

Progress in communication and transport, combined with the ideology of free markets has given unprecedented mobility to goods, services, and capital. With growing economic integration and economic interdependence among nations, a global marketplace emerged, fostering new competition requiring greater efficiency and genuine expertise in optimizing supply chains across all sectors. All business organizations are into cost efficiency and sustainable practices to remain competitive. Returnable packaging is a sustainable form of container that is both cost-effective and sustainable. It offers a lot of advantages in organizing an assembly plant's complexity. The standardization that it offers, provides quick and easy performance of tasks, such as safe shipping of supplies and the ability to stack or gather packaging for safety and housekeeping. Various parts are prepared and used to assemble a car. And optimizing the reverse logistics techniques especially the deployment of returnable packaging in the parts delivery will significantly contribute not just to the financial improvement but also for the sustainable environment efforts by eliminating the waste on using single-use packaging. Just recently, the headquarters released the company goal in 2020; two leading duties were to reduce cost and be an environment-friendly company together with its worldwide affiliates. The company implements the Just-in-Time (JIT) techniques in its operations. However, the organization still encounter problems in some Key Performance Indicators (KPI) such as 1) Return Punctuality referring to the gap in quantities on reverse logistics of returnable module and boxes, between the monthly plan and in actual return

shipment condition, 2) Component Damage referring to the damages acquired by the module/box, 3) Component Loss referring to missing elements of module/box, 4) Scanning Accuracy, referring to inaccurate uploading of module/box ID onto the inventory system, 5) Leadtime, referring to the movement of Returnable packaging from a process to another process 6) Aging Stock, referring to Idle module/box in the pipeline, and 7) Average Stocks referring to returnable packaging inventory to be at a proper level between min-max control until it is processed in the Vanning Area on Re-Export or Returning shipment.

1.2 Objectives

This research was conducted to find out what affects the cycle time of returnable packaging from the Returnable Packaging Logistics Operation and, thereafter, provide recommendations on order to improve performance.

1.3 Scope and Limitations of the Study

This study focused on returnable packaging logistics operation containers in an automotive company. Secondary data were gathered from the last Forty-eight months of (January 2015 – December 2018). These were utilized in the study, for obtaining actual KPI of returnable packaging. The criteria used for the study were Return Punctuality Ratio, Component Damage Ratio, Component Loss, Scanning Accuracy, Leadtime, Aging Stock, and Average Stocks. Survey questionnaire based on Cycle-Time Improvement Guidebook – Partnering for Total Quality by Kanagal (1992) was also utilized in the study; respondents were student interns/trainee, contractual employees, team leaders, group leaders, operators (Regular), supervisors/foreman, and manager directly involved and who were actively employed at the time of the study in the Returnable Packaging Logistics Operation. The survey was conducted in Import Warehouse, Production Material Handling and Export Warehouse. The study began in December 2018 and was completed in March 2019.

2. Literature Review

The utilization of returnable packaging (both modules and boxes) is increasing in various industries. It offers prevalent benefits over the traditional single-use packaging (Hinkka & Holmström). According to (Ilic, Andersen, Michahelles, & Fleisch, 2008), logistics managers should develop and implement reverse logistics using new technology which will increase accuracy and visibility. New technology also includes decision system which can provide quick decision-making.

The dynamic supply chains of the automotive industry impose an important role for packaging. The efficient and effective operation of multi-site car manufacturing should develop a forecasting and planning model to support the demand (Klug, 2011). Supporting demand will likewise need to forecast support containers or packaging which will be used to complete an item. Monitoring and traceability within supply chains are key issues in forecasting, planning, and delivery. A reliable inventory system provided by a good information technology is therefore necessary. Moreover, enhanced environmental regulations are pushing companies to reduce, reuse, recycle packaging materials which are considered as a part of reverse logistics and it becomes the best practice in many industries. (Boonkaew, 2011).

Packaging materials are included in the inventory information system. Newly developed systems include new functions and, therefore, are able to support the need to provide different information needed by the different users of a complex organization (Baker, Yacobozzi, Porczak, & Reasoner, 2010). This is one justification why large retailers are obliging their suppliers to adopt recent technology; information provides control in their operation even in remote areas (Martínez-Sala, Egea-López, García-Sánchez, & García-Haro, 2009). A knowledge-based method supports a framework, which allows records processing, with the aid of enabling quick improvement and deployment of web-accessible records information warehouses (Zhang, Sun, Chitkushev, & Brusic, 2014). High-throughput Big Data methods can gather, and curate structured, and unstructured data, provide high-throughput integrated analytic solutions, affords the promise of incorporating large data sets in a near real-time fashion, thereby bringing predictive models with improved accuracy (Srinivas et al., 2017).

Returnable packaging must be designed by addressing trade-offs between prices and environmental risks to please producers and environmentalists alike. The cost of returnable packaging covers aspects such as products, processing, compilation, storage, and disposal (Kamarthi, Gupta, & Lerpong, 2003).

3. Methods

Descriptive method was used in the research. Both primary and secondary data were used in the study. Secondary data in the form of Key Performance Indices (Return Punctuality, Component Damage, Component Loss Scanning Accuracy, Leadtime, Aging Stock, and Average Stocks) were obtained from the information system of the company to assess the performance of the company for two (2) consecutive years. For the primary data, survey questionnaire based on Cycle-Time Improvement Guidebook – Partnering for Total Quality by Kanagal (1992) was employed in the study. The survey questionnaire was validated by the panel of experts, as well as it was pre-tested by the employees of Automotive Manufacturing Plant in the Philippines. Respondents of the survey were student interns/trainee, contractual employees, team leaders, group leaders, operators (regular), supervisors/foremen, and manager directly involved and who were actively employed at the time of the study in the Returnable Packaging Logistics Operation. Respondents comprised 80% of people working under the operation**;** 161 team members who were directly involved in the operation on both module and boxes in different processes or work areas such as Devanning Process, Withdrawal Process, Empty Receiving Process, Vanning process under the CKD or Complete Knock Down Warehouse Operation and then population from the Material Handling Operation in the Manufacturing Division (Module Receiving Process, Welding Unpacking Process, Assembly Unpacking Process, EFC Preparation Process, IMV Preparation Process, and Common Preparation process. The following table was used to interpret the data.

Numerical	Range Interval	Percentage (Degree of assessment)	Verbal Interpretation
5	4.51-5.0	Between 96-100%	Strongly Agree
4	3.51-4.50	Between 75-95%	Agree
3	2.51-3.50	Between 50-74%	Somehow Agree
2	1.51-2.50	Between 25-49%	Disagree
1	1.00-1.50	Below 25%	Strongly Disagree

Figure 1. Summary of Scaling and Verbal Interpretation

4. Data Collection

Request to collect data from the automotive company was sought as well as request to float survey questionnaire to the employees and interns at the Returnable Packaging Logistics Operation network was done. After obtaining permission, secondary data needed was retrieved and extracted from the company information system. The survey questionnaire, on the other hand, was distributed to all workers in the department. The survey questionnaire utilized ticking of the appropriate box in providing answer. The lists of target respondents were obtained from the different sections. The distribution of the survey questionnaire was spearheaded by the respective area supervisors and foremen. Important concerns were discussed by the researcher, such as approval, data security, and safety of personal details. It was requested that the respondents complete the survey and ensure that no blanks, tick boxes would be left blank before they submit it back to the respective supervisor/foremen. The respondents were given ample and sufficient time to answer the survey. Likewise, the respondents were assured of the maximum confidentiality and ethicality of the information collected from them. Eighty percent (80%) of the questionnaire were returned. All papers contained complete answers.

5. Results and Discussion

5.1 Key Performance Indicators -Target Vs. Actual

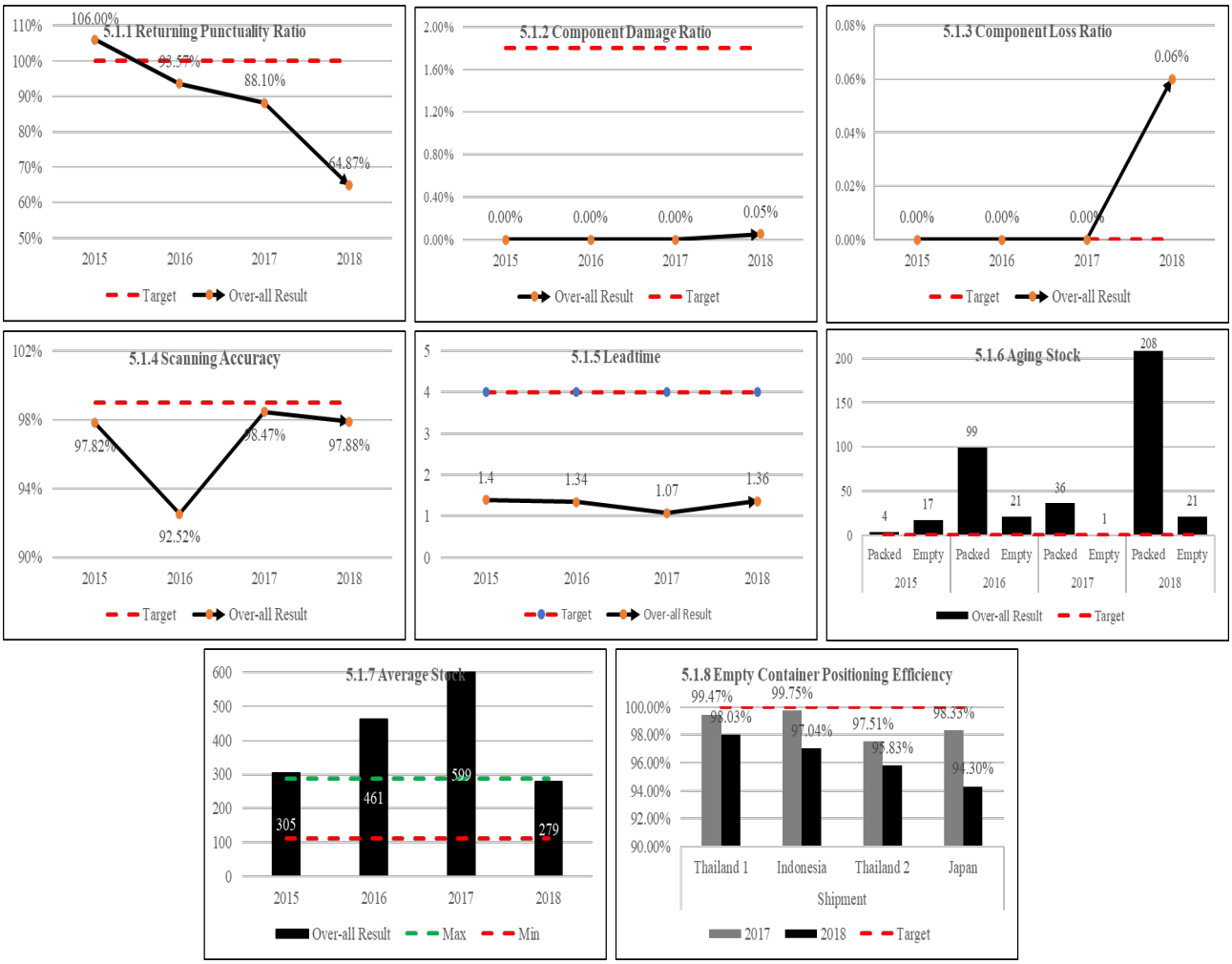

Figure 2. Summary of Key Performance Indicators -Target vs. Actual (2015-2018)

As shown in 5.1.1, the Returning Punctuality Ratio was achieved in 2015 with an exceeded score of 106%. While in succeeding years, the KPI failed with a decreasing score from 93.57% in 2016, 88.10% in 2017 and 64.87% in 2018. As shown in Graph 5.1.2, the positive outcome on the Component Damage Ratio was constantly kept 0% from 2015 until 2017, but minimal damages were found in 2018 with a score of 0.05%. In any case, all years accomplished the objective. As shown in Graph 5.1.3, the positive outcome on the Component Loss Ratio was constantly got 0% from 2015 until 2017, but component losses were recorded in 2018 with a score of 0.06%. As shown in Graph 5.1.4, Scanning Accuracy's target performance was never achieved with 97.82% in the year 2015, 92.52% in the year 2016, 98.47% in the year 2017, and lastly 97.88% on the year 2018. All performance for Scanning Accuracy each year failed. Based on Graph 5.1.5, the Leadtime positive outcome was achieved which means there is no returnable packaging exceeded the limit from 2015 with 1.4 idle days. Then score of 1.34 idle days in 2016, 1.07 idle days in 2017, and 1.36 idle days in 2018. This implies all the plant is reliably accomplishing the Key Performance Indicators. Based on Graph 5.1.6, the Aging Stocks' positive outcome was never achieved which means there are returnable packaging packed or empty exceeded the limit from 2015 with Packed: 4 pcs, Empty: 14. Then Packed: 99 pcs, Empty: 21 in 2016, Packed: 36 pcs, Empty: 1 pc in 2017. And lastly Packed: 208 pcs, Empty: 21 in 2018, this means that all

the plants were consistently failed to achieve the Key Performance Indicator. Based on Graph 5.1.7, the Plant achieved positive results in 2018 with an average stock of 279 pcs. While in 2015 exceeds the maximum limit with an average of 305 pcs, 461 pcs in 2016 and 599 pcs in 2017. It went higher. Based on Graph 5.1.8, the Empty Container efficiency KPI data from 2017 until 2018 shows a decreasing trend in the efficiency with impact the Return Punctuality Ratio indicators that has a 100% target compliance. The possible reason that affected the efficiency was the congestion at the container yard or a high utilization on the Container Yard which exceeded the normal capacity of 75% on both Manila and Batangas ports. The main reason why we fail to reach target efficiency is attributed to the region's congested highways and other access routes.

5.2 Respondents' Assessment on Factors Affecting KPIs

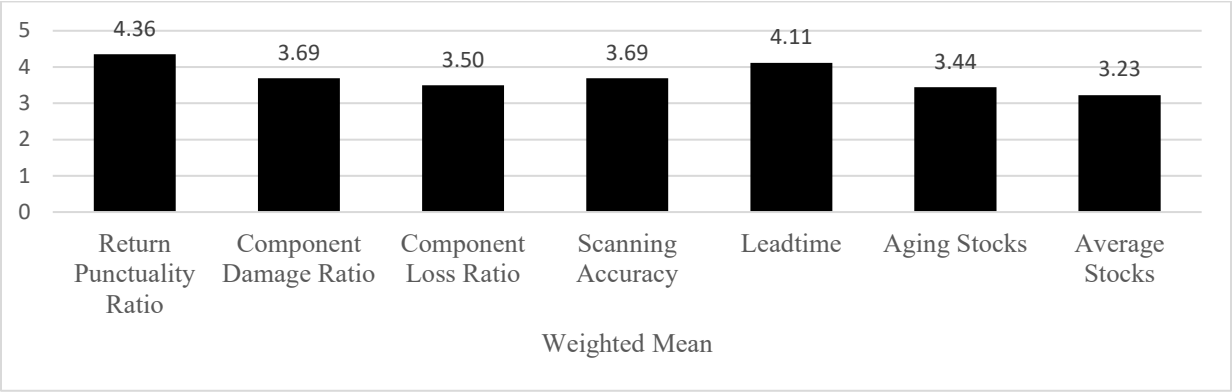

Figure 3. Respondents' Assessments on Key Performance Indicators

As assessed by the respondents, Return Punctuality Ratio got a rating of 4.36 or an interpretation of Agree. The team members agree that production continuity, proper truck arrival and positioning and equipment performance have big contributions to the turn-around time of returnable packaging.

In terms of Component Damage Ratio, the team members' assessment 3.69 or Agree. In their assessment, some members were unaware, or they failed to recognize that incorrect stacking, unauthorized use of returnable module/box as garbage and personal belongings storage and hurriedly and carelessly transporting the returnable module/boxes cause damage to returnable module/boxes. This suggests that members use the material for other purposes which affect its availability for the intended use.

In terms of the Component Loss Ratio, assessment of the team members was 3.50 or Somehow Agree. They replied that there were instances of misplacing of component during unpacking and instances when they were not able to check the proper folding method of returnable packaging. According to them, there was no regular orientation on proper folding method of returnable packaging. This suggests that some team members do not fully understand the basic operation concepts and that they need to be oriented or refreshed on the procedure.

In terms of Scanning Accuracy, the team members' assessment was 3.69 or Somehow Agree. Members admitted that the Scanning process was being hurriedly done due to takt time requirement. They also indicated that only the concerned personnel can perform manual operation during system breakdown. They also indicated that a regular orientation on scanning procedure is done. This means that personnel are properly oriented on scanning, however, it may not be the complete process, which is why only some members can perform manual operation during breakdown. Moreover, doing a task hurriedly because of tack time may suggest that a new study may be needed.

In terms of Leadtime, the team members' assessment was 4.11 or Agree. The First In, First Out procedure on empty returnable packaging is fully understood by many, but not all concerned team members. FIFO visualization is not available for all members and that empty returnable packaging that arrived first, were not given priority in processing

also. These statements mean that there is a need to re-orient members on the policy and strict implementation be enforced.

In terms of Aging stocks, the team members' assessment is 3.44 or Somehow Agree. Majority of the members agree that sudden production plan revision affects the unpacking sequence. Majority of them indicated that they were not fully aware of the allowable storage time of returnable packaging and less than half of them admitted that the returnable packaging was being used for other storage purposes, such as storing of one-way component.

In terms of Average Stocks, team members' assessment was 3.23 or Somehow Agree. Members assessed that somehow there is no night shift operation for vanning/shipping out of returnable packaging. Majority of the members assessed that proper truck arrival/positioning impact the standard stock limit, and most of them indicated that the returnable module inventory stocks can be visualized/known on a real time basis. These statements mean that not all members are aware that there is no night shift operation and may not be aware or mindful that truck performance affects the stocking limit. They also indicated that the information about returnable packaging stock is not available to them on a real-time basis, so they may have unreliable data which will cause them confusion.

It may be concluded from the results of the survey that there were many problems needed to be addressed and this is compatible with the performance of the automobile company in terms of data in figure 1.

5.3 Respondents' Assessment on Returnable Packaging Logistics Information System

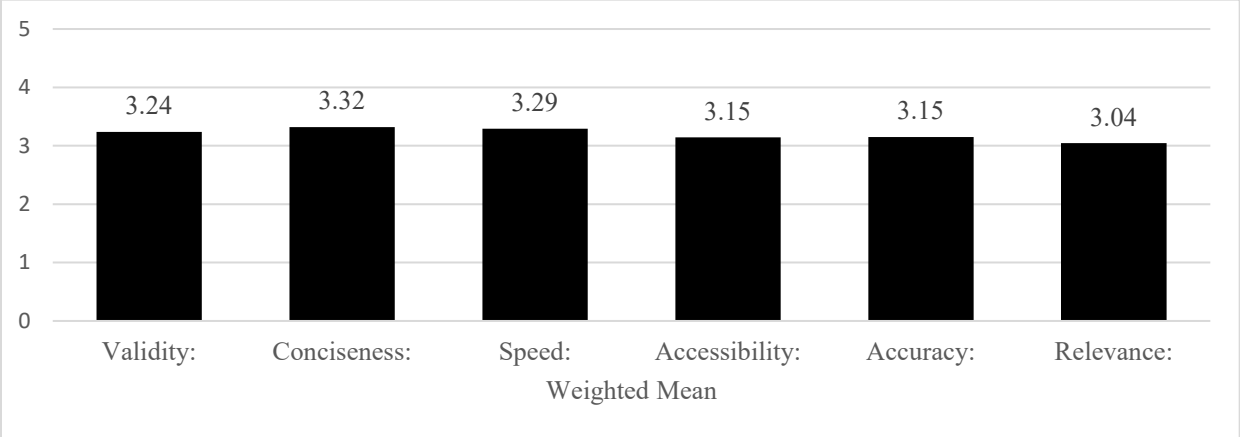

Figure 4. Assessment of Returnable Packaging Logistics Information System

As far as the team members' assessment in the existing information system related to Validity, which was 3.24 or Somehow Agree, team members replied that the packaging inventory in the current information system is one (1) day delay compared to the date of reporting is not always observed. Majority of the members indicated that the data necessary for the decision-maker to satisfactorily solve the problem at hand, is not available, and that generated data by the current information system are not accurate, consistent with facts and verifiable. This means that the target posting in the information system is not achieved.

In terms of Conciseness, team members' assessment is 3.32 or Somehow Agree. Majority of the members indicated that the exact data needed for specific problem or issue can be generated by the system, that there was too much data generated and that broad information from the system limited the user from making precise decisions in a short critical period. Especially when there is critical condition that needs a quick decision to provide immediate solutions.

In terms of Speed, the team members' assessment was 3.29 or Somehow Agree. According to the members, the current information system did not deliver information at the right time, the quick response did not always prevent the user from incurring idle time, and the current speed of the system affected the working performance of the user. This means

that the speed of connection of the system is not sufficient to prevent workers from incurring unnecessary delay in their task, thereby, negatively affecting work efficiency.

In terms of Accessibility, the team members' assessment was 3.15 or Somehow Agree. Many members replied that a good system can advise the user regarding complex problem. However, members also indicated that current the information system was not readily accessible in the desired form when it was needed most of the time and there should be no connection breakdown.

In terms of Accuracy, team members' assessment was 3.15 or Somehow Agree. Members indicated that the current information system could not produce user-friendly summary, forecast data and they thought that insufficient or inaccurate knowledge usually led to low-quality decisions. Moreover, they assessed that the existing information/logistics monitoring system does not deliver information at the right destination and to the right person.

In terms of Relevance, team members' assessment was 3.04 or Somehow Agree. According to the members, most of the time, the system could not produce feasible decision choices, could not decode abbreviations, short-hand, or acronyms contained in the information. Moreover, majority of the members somehow agreed that current information system could hardly provide applicable solutions that could contribute to the elimination of the problem; again, this supports the earlier findings that the available system could hardly support in providing solutions to problems, encountered by the operating unit.

It can be concluded from the result of the study that team members of the Returnable Packaging Logistics Operation encounter problems with the current information system. They found that information is not supplied real-time which is crucial in forecasting and planning. Information delay provided unreliable figures that were inconsistent with physical availability. Furthermore, members could not obtain the data needed to identify and solve problems. It can be further analyzed that the system lagged in terms of features needed by a complex supply chain organization.

6. Recommendations, Conclusion and the Way Forward

In view of the discovery in the study, it is recommended that a re-orientation on all the procedures pertaining to returnable packaging be done. This will raise awareness on the part of all team members, after which, strict compliance may be enforced. It is also being recommended that the current information system be upgraded to a more responsive system; one that can provide real-time information, in harmony with physical inventory and one which is reliable for planning and forecasting. The Predictive Data Analytics Technology is one information system which may be considered to support the heavy requirements of the Returnable Packaging Logistics Operation. In order to prevent damages in the returnable packaging and sustain good performance, the following were recommended and currently installed; cushion on holding brackets to avoid module side panel damage and additional base support to avoid module bending damages as shown on figure 5 and a prevention holder to avoid swapping of Left-hand and Right-hand panel on figure 7. To prevent misplaced and loss of components, a component holder/hanger was designed as shown on figure 6 and sample photo on figure 7. Updating the labels of module types and maintaining the poka-yoke will improve the FIFO system.

Figure 5: Sample Photos of cushion and base support

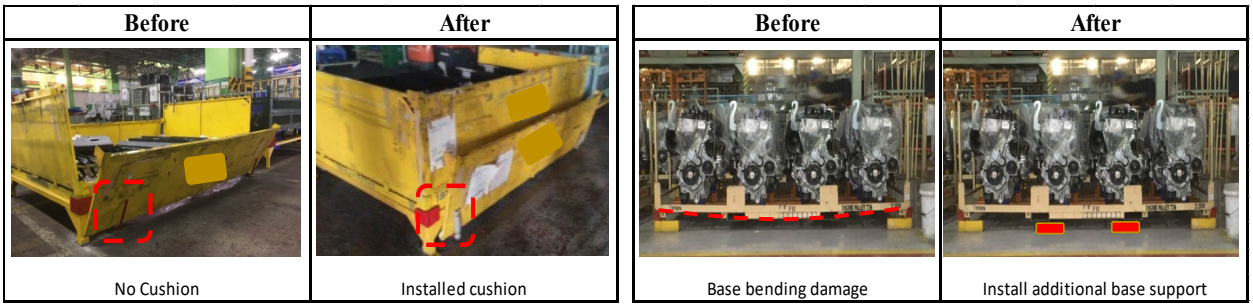

Figure 6: Component holder / hanger design (U/M: mm)

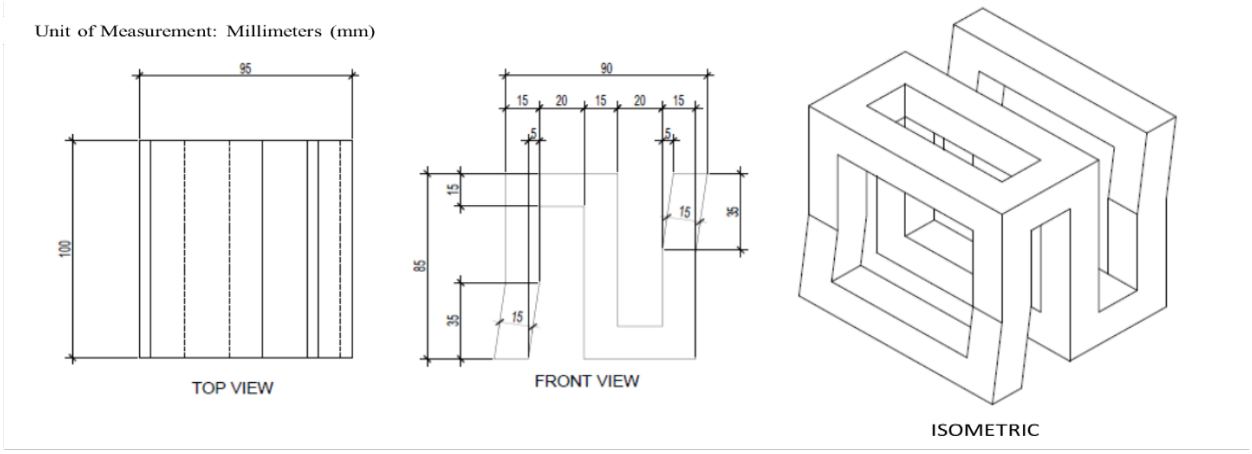

Figure 7: Sample Photos of hanger and holder.

Acknowledgements

Before anything else, I offer this to our Almighty God, for His unlimited guidance and blessing all throughout my thesis that I may accomplish the research successfully. I wish to express my sincere and profound appreciation to my thesis adviser, Engr. Rhodora N. Buluran and to the panel members, Dr. Ben B. Andres, Dr. Marianito P. Gallego Jr., Dr. Paterson L. Encabo, Dr. Lynly P. De La Cuesta, and Dr. Marion A. Cresencio, for giving me the chance and for imparting invaluable training during this thesis. I was deeply inspired by their vision, sincerity and motivation. They have taught me the methodology to carry out the thesis and to present this works as clearly as possible. The work and study under their guidance was a great privilege and an honor. For what they've offered, I'm extremely thankful. I would like to thank the respondent organization that furnished the essential data and information needed in this thesis, especially those who participated in answering my survey questionnaire. I am extremely grateful to my family for their love, prayers, care and sacrifices for educating and preparing me for my future. I am very much thankful for their love, understanding, prayers and continuing support to complete this thesis. Finally, my thanks go to all the people who have supported me to complete the research work directly or indirectly.

References

Baker, S., Yacobozzi, A., Porczak, H., & Reasoner, C. (2010). System and method for managing returnable containers: Google Patents.

Boonkaew, S. (2011). Returnable packaging as part of reverse logistics in the automotive part industry.

Hinkka, V., & Holmström, J. Factors that enable and obstruct combined asset and goods tracking: A multiple case study.

Ilic, A., Andersen, T., Michahelles, F., & Fleisch, E. (2008). Analyzing Product Flows with the Supply Chain Visualizer. Paper presented at the demo at Int'l Conf. for Industry and Academia (Internet of Things 2008).

Kamarthi, S. V., Gupta, S. M., & Lerpong, J. (2003). Evaluation of trade-offs in costs and environmental impacts for returnable packaging implementation. Evaluation.

Kanagal, A. (1992). Cycle-Time Improvement Guidebook – Partnering for Total Quality.

Klug, F. (2011). Automotive supply chain logistics: container demand planning using Monte Carlo simulation. International Journal of Automotive Technology and Management, 11(3), 254-268.

Martínez-Sala, A. S., Egea-López, E., García-Sánchez, F., & García-Haro, J. (2009). Tracking of returnable packaging and transport units with active RFID in the grocery supply chain. Computers in Industry, 60(3), 161-171.

Srinivas, T. R., Taber, D. J., Su, Z., Zhang, J., Mour, G., Northrup, D., Mauldin, P. D. (2017). Big Data, Predictive Analytics, and Quality Improvement in Kidney Transplantation: A Proof of Concept. Am J Transplant, 17(3), 671-681. doi:10.1111/ajt.14099

Zhang, G. L., Sun, J., Chitkushev, L., & Brusic, V. (2014). Big data analytics in immunology: a knowledge-based approach. Biomed Res Int, 2014, 437987. doi:10.1155/2014/437987

Biographies

Engr. Bryan Jay O. Capistrano is an Industrial Engineer. He started his undergraduate study at Polytechnic University of the Philippines, College of Engineering in Santa Mesa, Manila, Philippines on the 1st Semester of the School Year 2009-2010. His informal logistics experiences were gained during the height of the development of the Philippine Arena at Bulacan in 2012, the Development of Uptown Mall at BCG, and some MMDA flood control projects in Pasay- Makati area in 2013 as the Logistics Coordinator for the hauling of debris and material for the construction projects, while simultaneously pursuing the degree. He received his Bachelor of Science in Industrial Engineering in May 2014. After college, he began working at Toyota Motor Philippines Corporation in July 2014 as an Export Specialist / Logistics Engineer under Production Control and Logistics Division and was assigned for Multi-Source Parts, and as the main Person-in-charge of the Toyota Motor Philippine Plant in the Asia Pacific Region for the Returnable Packaging operation together with the government & global compliance, process improvement, cost reduction, and quality improvement projects. He began working on his Master of Science in Industrial Engineering and Management in 2017 and He received his master's degree in May 2019.

Engr. Rhodora Ramos Nicolas-Buluran is a Professional Industrial Engineer. She obtained her Bachelor of Science in Management and Industrial Engineering from Mapua Institute of Technology and her Master of Science in Industrial Engineering and Management from the Polytechnic University of the Philippines. She is a candidate for Doctor of Business Administration at the Philippine Women's University. She has a ten-year experience in the semiconductor industry in different positions, Industrial Engineering, Production, Quality Control, and Quality Assurance. She was also involved in special projects as a team leader, team member, or as single Project Engineer. Currently, she is an Assistant Professor at the Polytechnic University of the Philippines, where she teaches both undergraduate and graduate students of Industrial Engineering.