FEA of a Tri-adjustable Automated Heavy-Duty Handling System Designed on Industry 4.0 Principles

S.Z. Mafokwane and D.V.V. Kallon
Department of Mechanical and Industrial Engineering Technology,
University of Johannesburg, South Africa.
zamashaun@gmail.com

Abstract

Materials Handling (MH) is one of the most essential aspects within manufacturing processes and/or industries. MH equipment are mechanical equipment used for the movement, storage, control and protection of materials, goods, and products throughout the process of manufacturing, distribution, consumption, and disposal. Transportation equipment used in manufacturing industries varies from pallet jack to forklift trucks and/or cranes. The size and type of a Material Handling System (MHS) and/or equipment influences the effectivity of the internal logistics within manufacturing industries. Therefore, it is very essential to choose a correct MHS for a correct manufacturing process which requires material handling to complete its operation. Incorrect usage or selection of an MHS for an operational process may lead to down time, damage to facility, increase in operating costs and/or pose Occupational Health and Safety (OHS) risks to workers. Over the years, many South African industries have been using Forklift trucks to move bigger loads from one point to another till today. The use of large forklift trucks within indoor manufacturing processes poses OHS risks to workers as its Internal Combustion Engine (ICE) produces fumes (Carbon Monoxide, CO) when in operation and exhaust fumes, (CO), are harmful to human's health. On this basis, a new system design is recommended to eliminate the use of MHS that relies on ICE power source to prevent OHS risks in indoor manufacturing industries. In this project, Autodesk Inventor Professional software was used for design development of technical drawings and simulation as well as validation of the new system's structure. Vehicle Dynamics' principles and equations are used to determine the overall Rolling Resistance, Tractive Effort of the new system, wheel torque, and the power required to drive the system under 20 – ton load capacity. The new system design has been developed to operate using a Hydraulic Power pack source, where it consists of four hydraulic wheel hubs for driving the system, four hydraulic cylinders for lifting & lowering, and a double rod end hydraulic cylinder for steering. Electro-Hydraulic circuit systems were developed and proposed using electronics and fluid mechanics phenomena. Again, principles, laws and equations of Strength of Materials has been carried out for validation of the material selection of the new design system's structure as well as verifying buckling, deflection & bending stresses, and moments.

Keywords
Material Handling System, Internal Combustion Engine, Occupational Health & Safety, Manufacturing, Hydraulics, Finite Element Methods.

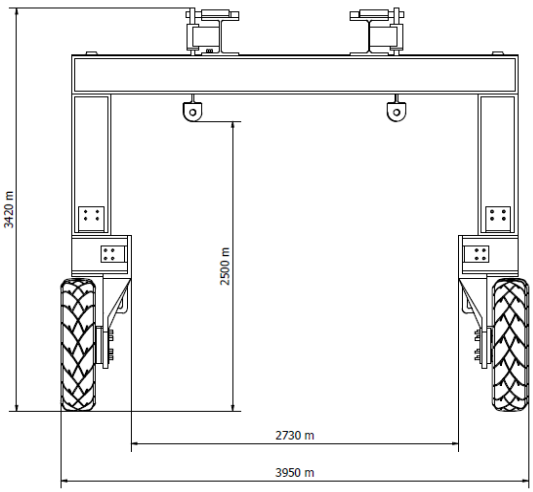

Figure 1. New System design front view dimensions (mm) (Mafokwane, et al., 2019).

1. Introduction

In this research document, new design system simulations are conducted and clarified. The simulation is done using a technically drawn model from Autodesk Inventor Professional considering different loads applied on the new system design structure. Simulation was conducted to analyse and verify the feasibility of the new design system' main frame structure including its components while in operation under severe conditions and in heavy duty handling. The simulation results summary was used to analyse the performance and validity of material selection of the new system' components through Autodesk Inventor Pro, Stress Analysis simulation feature (as shown in Figure 1) (Mafokwane, et al., 2019).

2. Model Design Development

The system has been designed using Autodesk Inventor as shown in Figures 1-2. In this design, the dimensions and turning radius of the equipment have been studied. The spreader beam is placed 103.9 mm away from back and front frame to prevent the spreader beam from damaging the frame while lifting and lowering. The spreader beam is designed to be 3 m above the ground, making the system to be able to handle loads <3m but with a range of 1 to 2.2 m in height and again load not longer than 3,7 in length. It is important to maintain the specified distance for the spreader beam to have enough space while moving (as shown in Figure 2).

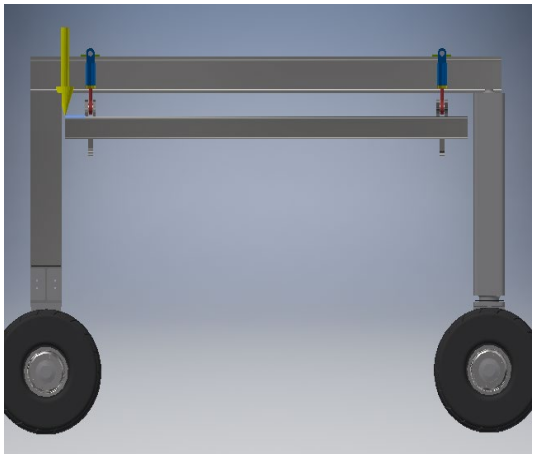

Figure 2. Selected force(s) (Mafokwane, et al., 2019).

3. New System Design Model Testing Justification

This section provides and overview of the new system design simulation test matrix, as well as defining stress analysis simulation conditions and Engineering Stress Analysis Procedures.

3.1. Test Matrix

Test matrix methodology for the new system design is focused on static analysis done to evaluate the behaviour of the proposed model under the action of balancing forces. Static structural analysis evaluates the deformation, strain produced, stress induced and other structural parameters. The procedure in achieving the analysis is done through the steps below: (Nikishkov, 2004).

- Selecting the stress analysis in environment tab on Autodesk Inventor.
- Creating simulation from designed models and assign the material suitable for the column to beam bolted connection.
- Under the loads ribbon selected remote force and located (the face, edges, or vertices) where the force is to be applied precisely.
- Entered load parameters for the magnitude and directions of the force on spreader beam.
- Start simulation repeatedly changing the loads of the system's frame structure.

3.2. Stress Analysis Simulation Boundary Conditions

- Maximum deflection of a cantilever beam occurs when x=L
- Maximum Von Mises Criterion and principal stresses occurs at x=L
- Maximum Bending stress occurs when x=L

3.3. Engineering Stress Analysis Procedure (Steps in FEM)

Stress analysis is an engineering discipline that uses many methods to determine the stresses and strains in materials and structure subjected to forces. It is also a primary task for civil, mechanical, and aerospace engineers involved in the design of structures of all sizes and it is used in the maintenance of such structures and to investigate the causes of structural failures. The method used in this project under the stress analysis is the Finite Element Method, which is for solving problems of engineering and mathematical physics. The use of finite element method includes structural analysis, heat transfer, fluid flow mass transport and electromagnetic potential. The general steps taken in finite element method helps in solving the engineering problem: (Nikishkov, 2004).

- Step 1 Discretize and select the element types,
- Step 2 Select a displacement function,
- Step 3 Define the strain/displacement and stress/strain relationships,
- Step 4 Derive the element stiffness Matrix and Equations,
- Step 5 Assemble the element equations to obtain the global equation and introduce boundary condition,
- Step 6 Solve for the unknown degrees of freedom,
- Step 7 Solve for the element strains and stresses,
- Step 8 Interpret the results (Nikishkov, 2004).

4. FEA Simulation and Results of the New System Design

In this section, simulations for the new system design are carried out. Material Stress Analysis is conducted to determine the strength of each designed component when under 20-ton load and varying loads under 20 – ton. Deflections of materials and safety factors are also determined (Mafokwane and Kallon., 2019).

4.1. Simulations of New Design Model

The FEA simulations were conducted to determine the main frame's deflection, Von Mises, safety factor as well as verifying the strongest bolt connection types between Flange-Flange bolted connection and Flange-Web of the structure of the new system design (as shown in Figures 3 & 4).

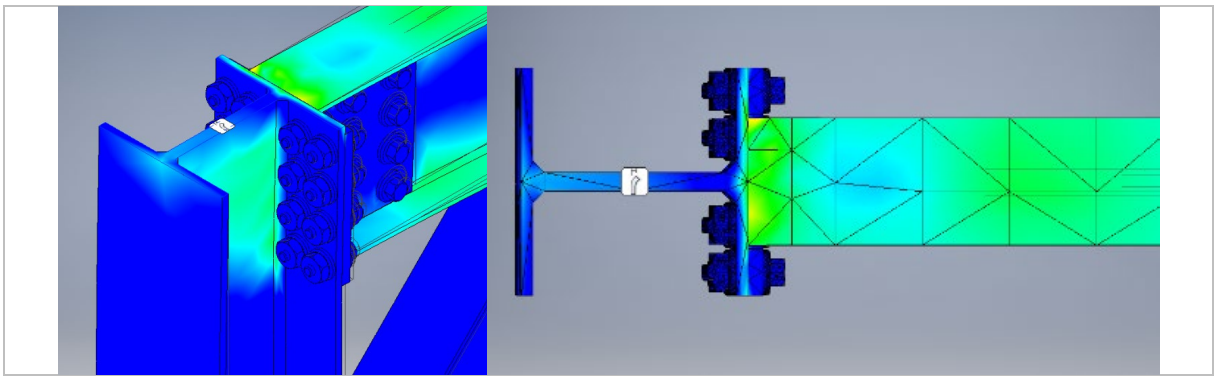

(a) (b)

Figure 3. Flange-Web connection. Flange experiencing stress concentrations (Mafokwane, et al., 2019)

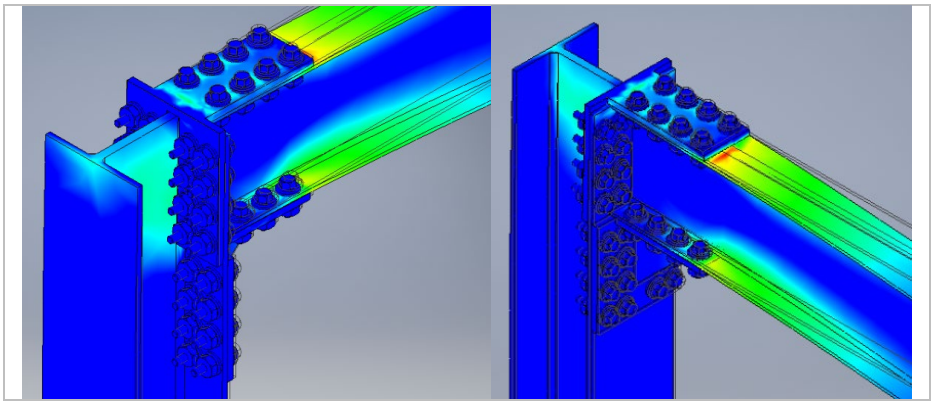

Figure 4. Flange to Web Stress Distribution points (Mafokwane, et al., 2019).

Stress analysis of the frame structure is populated so to determine maximum stresses on the structural joints as well as bending moments (Mafokwane, et al., 2019).

4.2. Discussion of Test Results

Upon interpretation of Spreader beam results of Von Mises stress, X Displacement (Vertical direction) and safety factor, it can be verified that the chosen materials and system's overall dimensions meet the requirement for handling a 20-ton load capacity. Von Mises and contact stress values are lesser than the ultimate tensile stress and yield tensile stress of the chosen materials, meaning, the model will operate under 20-ton (Mafokwane, et al., 2019).

4.3. New System Design Bolt Connection Validation and Simulation

No load greater than 25-ton SWL can be used on the developed model. Loads more than 25-ton and less were simulated and safety factors were populated, and they look as illustrated on figure 3 & 4, achieving maximum deflection of 17.83 mm which is not safe at all, refer to section 4.5 (Mafokwane, 2021).

4.4. Summary of Results (Tabular and Graphical)

After FEA simulations of Flange-Flange and Flange-Web bolted connections, it has been noted that a Flange-Flange connection is much stronger and it can resist bending deflection as it achieves minimum values of deflection than a Flange-Web bolted connection, see comparison in visual diagrams below. Therefore, this document recommends the use Flange-Flange bolt connection on beam to beam on main frame structure (Mafokwane and Kallon, 2020). Flange to Web bolted connection of the main structure graphical analysis and summary of results obtained during FEA simulation in Autodesk Inventor (refer to Table 1 & Figure 5).

Table 1. New Design System table summary (Mafokwane, et al., 2019).

Load Capacity (Ton)	Equivalent Strain	Von Mises Stress	Strain (Z-Z) [ul]	Stress (Z-Z) [MPa]	Deflection (mm)
30	0.00236002	587.904	0.00115692	314.429	17.8274
28	0.00157337	391.942	0.000771281	209.619	11.8849
25	0.000944004	235.16	0.00045871	123.834	7.13094
20	0.000698765	174.125	0.000341154	92.8765	5.32535
15	0.000465846	116.084	0.000227436	61.9171	3.55023
10	0.000232925	58.0426	0.000113718	30.9586	1.77512
5	7.76407E-05	19.3473	0.000037906	10.3196	0.591705

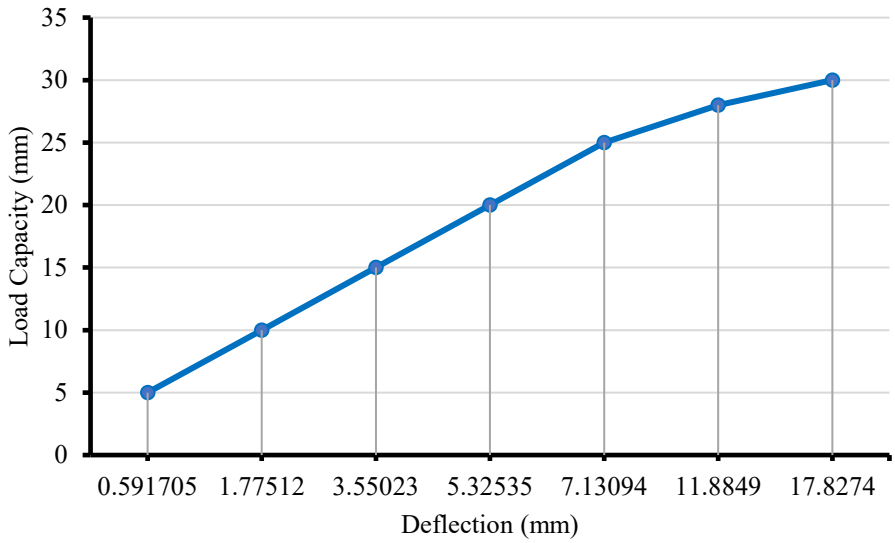

Figure 5. Load vs Deflection Graph (Mafokwane, et al., 2019).

4.5. Recommended Deflection Limits

Deflection limits are imposed in AS 1418.18 (Standards of Crane and Hoists) on vertical and lateral deflections of beams and columns for the purpose of obtaining satisfactory service performance of lifting devices. The following deflection limits for heavy duty handling serviceability loads, using dynamic factors of 1.0 (Shigley, 1996). Vertical settlement plus axial shortening of a support: $\Delta_z = \pm l/1000$ but not more than 10 mm, (as shown in Figure 6). Therefore, main frame structure' material selection and design are valid as it has been verified through Autodesk Inventor Stress Analysis as 20-ton load simulation gives 5.325 mm deflection, and it falls within <10 mm range, refer to Table 5 & Figure 11 (Engineering Toolbox, 2019).

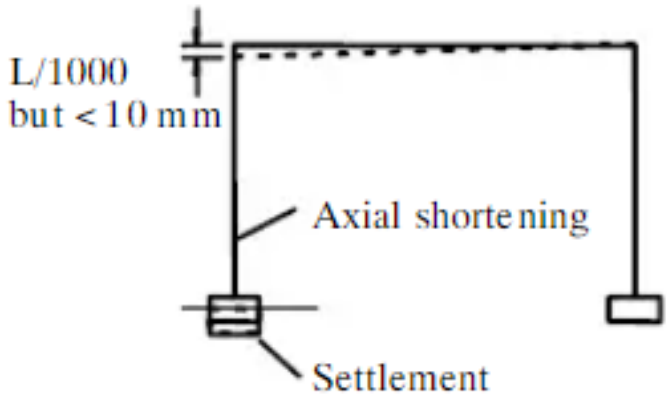

Figure 6. Column top displacement limit deflection limit (Mafokwane, et al., 2019)

5. Spreader Beam Simulation

Spreader beam experiences point load remotely on four hooking points (numbered 2, refer to Figure 12) when the new design system is under load of 20-ton. Each hooking point experiences a quarter of 20-ton weight thus, 49.05 kN. Fixed points (numbered 1, as shown in Figures 2 & 7), where four hydraulic lifting cylinders are interconnected to the spreader beam (Mafokwane and Kallon, 2021).

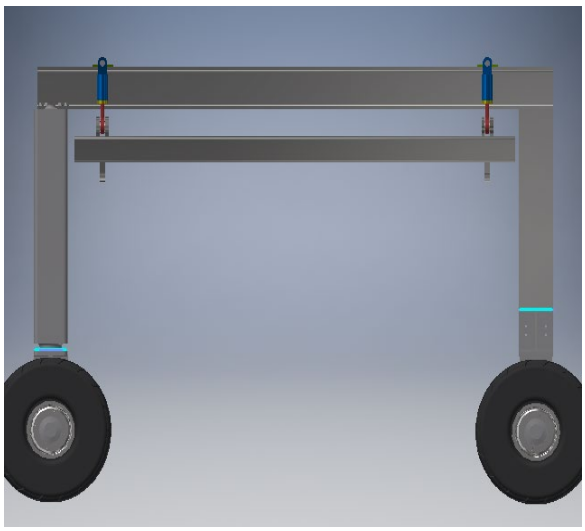

Figure 7. Fixed Constraints Selected Face(s) (Mafokwane, et al., 2019)

5.1. Spreader Beam Simulation Discussion

Material chosen for manufacturing of the spreader beam and technical design modelling of the component in terms of shape and dimensions is valid as it has been verified through Autodesk Stress Analysis. According to the component's physical properties, yield strength is 760 MPa and the maximum Von Mises stress induced by the component is 199.587 MPa giving us a safety factor of 3.81 ul, refer to Table 7. It has been observed from result summary table, that the maximum deflection is 2.709 mm under remote point loads. It can be concluded that the designed spreader beam is reliable and that its operational' life span will last (as shown in Tables 2 & 3), Factor

of Safety related to Stress). Please refer to Figures 8 & 9 for spreader beam simulation images (Mafokwane, at el., 2019).

Table 2. Spreader Beam Software Material Physical Properties (Mafokwane, et al., 2019).

Name	Steel, Mild, Welded	
General	Mass Density	7,85 g/cm^3
	Yield Strength	207 MPa
	Ultimate Tensile Strength	345 MPa
Stress	Young's Modulus	220 GPa
	Poisson's Ratio	0,275 ul
	Shear Modulus	86,2745 GPa
Part Name(s)	SPREADER BEAM.ipt	

Material	Steel, Mild, Welded
Density	7,85 g/cm^3
Mass	1561,52 kg
Area	19927700 mm^2
Volume	198920000 mm^3
Center of Gravity	x=1247,83 mm y=43,1878 mm z=2000 mm

Table 3. Spreader Beam Simulation Result Summary (Mafokwane, et al., 2019).

Name	Minimum	Maximum
Volume	198920000 mm^3	
Mass	1561,52 kg	
Von Mises Stress	0,452151 MPa	199,587 MPa
1st Principal Stress	-26,4196 MPa	245,651 MPa
3rd Principal Stress	-176,485 MPa	43,7975 MPa
Displacement	0 mm	3,82366 mm
Safety Factor	1,03714 ul	15 ul
Stress XX	-133,015 MPa	113,657 MPa
Stress XY	-62,2795 MPa	73,4198 MPa
Stress XZ	-75,8247 MPa	78,4753 MPa
Stress YY	-124,698 MPa	232,538 MPa
Stress YZ	-79,3617 MPa	92,298 MPa
Stress ZZ	-168,194 MPa	195,719 MPa
X Displacement	-3,24796 mm	2,70945 mm
Y Displacement	-3,04309 mm	2,48793 mm
Z Displacement	-1,35787 mm	0,675541 mm
Equivalent Strain	0,00000174764 ul	0,000837591 ul
1st Principal Strain	-0,00000067004 ul	0,000999772 ul
3rd Principal Strain	-0,0007447 ul	-0,000000334485 ul
Strain XX	-0,000621974 ul	0,000517355 ul
Strain XY	-0,000360938 ul	0,000425501 ul
Strain XZ	-0,000439438 ul	0,0004548 ul
Strain YY	-0,000474843 ul	0,00092378 ul
Strain YZ	-0,000459937 ul	0,000534909 ul
Strain ZZ	-0,000696652 ul	0,000830264 ul

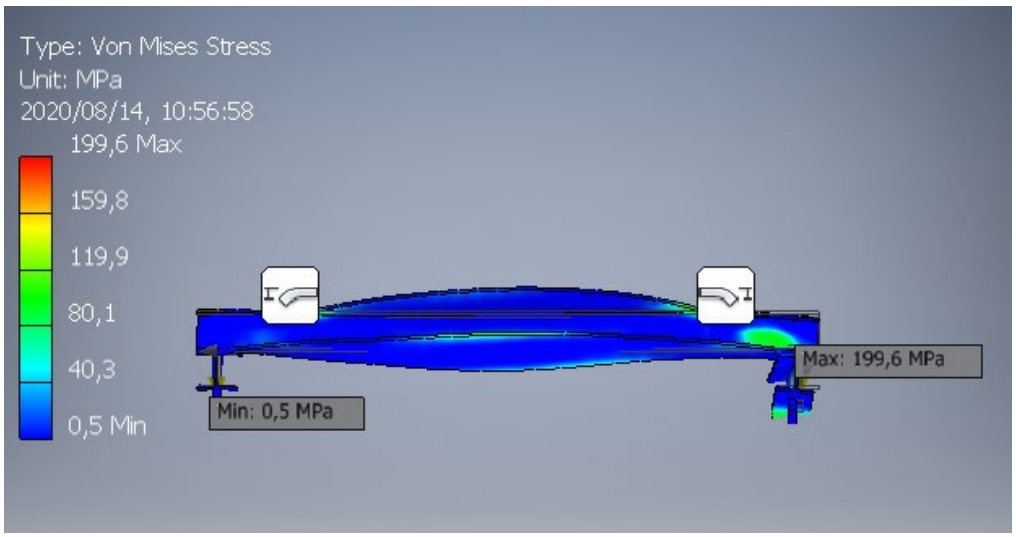

Figure 8. Spreader Beam Von Mises Stress Distribution Simulation (Mafokwane, et al., 2019).

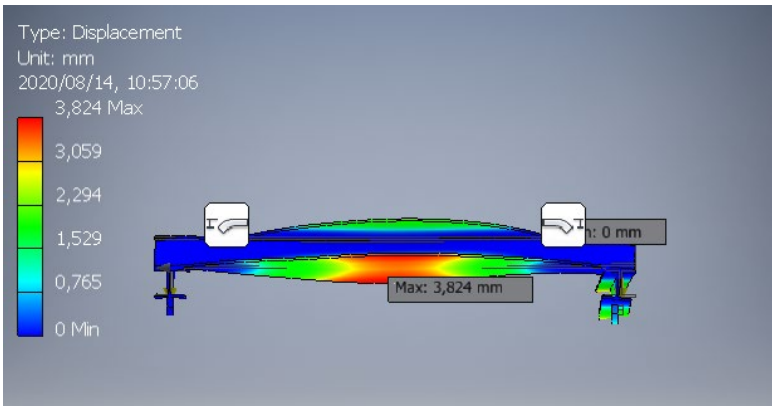

Figure 9. Spreader Beam Deflection Simulation (Mafokwane, et al., 2019)

6. Steering Clamp Bracket Simulation

Steering clamp bracket experiences bending stress created by the steering effort applied by the hydraulic steering cylinder when turning the front wheels of the new design system (as shown in Figures 10 & 11). Steering effort is 278.49 kN and bending moment of 128.1 kN.m values are used for simulation of the clamp bracket (Mafokwane, 2021).

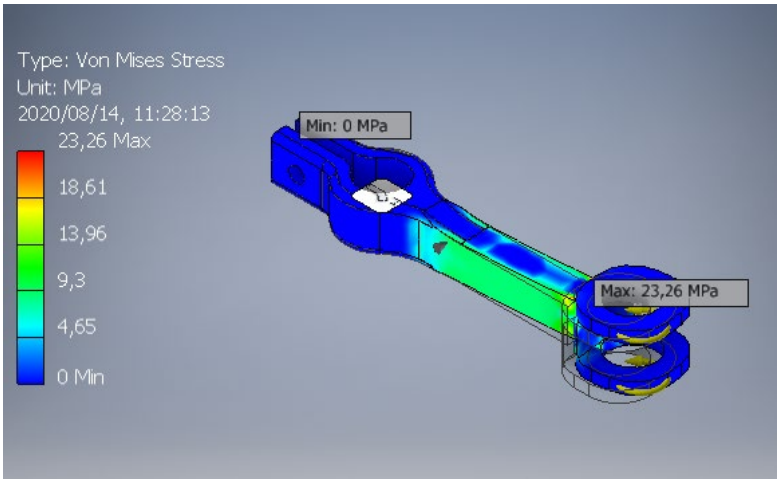

Figure 10. Von Mises Stress distribution simulation (Mafokwane, at el., 2019)

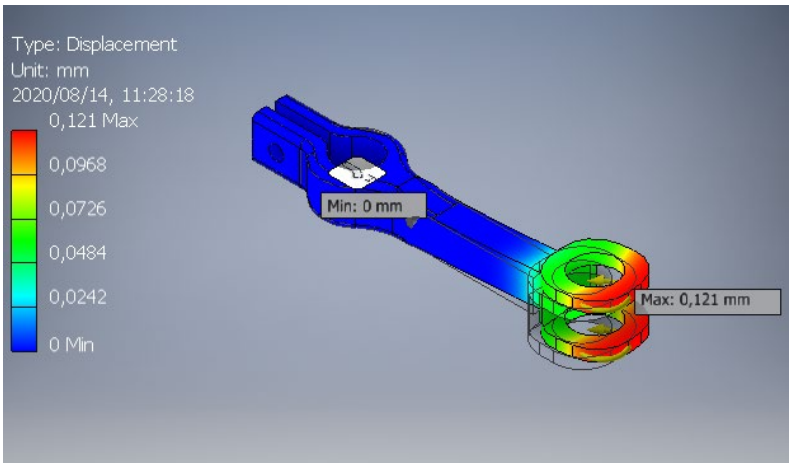

Figure 11. Bending Moment Deflection simulation (Mafokwane, et al., 2019)

6.1. Steering Clamp Bracket Simulation Discussion

Material chosen for manufacturing of the steering clamp bracket and technical design modelling of the component in terms of shape and dimensions is valid as it has been verified through Autodesk Stress Analysis. According to

the component's physical properties, yield strength is 207 MP and the maximum Von Mises stress induced by the component is 23.26 MPa giving us a safety factor of 8.899ul, as shown in table 5. It has been observed from result summary table, that the maximum deflection is 0.3165 mm under steering effort load. It can be concluded that the designed steering clamp bracket is reliable and that its operational' life span will last almost forever, (see Table 11, Factor of Safety related to Stress).

Table 4. Steering Clamp Support Bracket Result Summary (Mafokwane, et al., 2019).

Name	Minimum	Maximum
Volume	1102350 mm^3	
Mass	8,65347 kg	
Von Mises Stress	0,00000573906 MPa	23,2592 MPa
1st Principal Stress	-4,82989 MPa	23,1302 MPa
3rd Principal Stress	-26,8089 MPa	3,72184 MPa
Displacement	0 mm	0,12104 mm
Safety Factor	8,89972 ul	15 ul
Stress XX	-23,6314 MPa	20,8678 MPa
Stress XY	-6,36196 MPa	6,41706 MPa
Stress XZ	-5,74985 MPa	6,27712 MPa
Stress YY	-7,62664 MPa	7,41893 MPa
Stress YZ	-5,0532 MPa	4,73257 MPa
Stress ZZ	-10,3024 MPa	10,2609 MPa
X Displacement	-0,0316743 mm	0,0316501 mm
Y Displacement	-0,0023076 mm	0,00232129 mm
Z Displacement	-0,120888 mm	0,00009877 mm
Equivalent Strain	0,0000000000226994 ul	0,0000955439 ul
1st Principal Strain	0,0000000000238888 ul	0,0000984949 ul
3rd Principal Strain	-0,000112734 ul	0,00000000000159088 ul
Strain XX	-0,0000943188 ul	0,0000853831 ul
Strain XY	-0,0000368704 ul	0,0000371898 ul
Strain XZ	-0,000033323 ul	0,0000363788 ul
Strain YY	-0,0000291724 ul	0,0000274901 ul
Strain YZ	-0,0000292856 ul	0,0000274274 ul
Strain ZZ	-0,0000427802 ul	0,0000428209 ul

7. Rear and Front Swivel Support Bracket Simulation

Rear and Front Swivel Support Bracket Simulation experiences point loads from the main structure when loaded (as shown in Figure 12 and 13). The point load exerted on each support brackets is 39240 N, (as shown in Tables 5 & 6). Correct material as well as the abovementioned force has been used for the simulation (Mafokwane and Kallon, 2021).

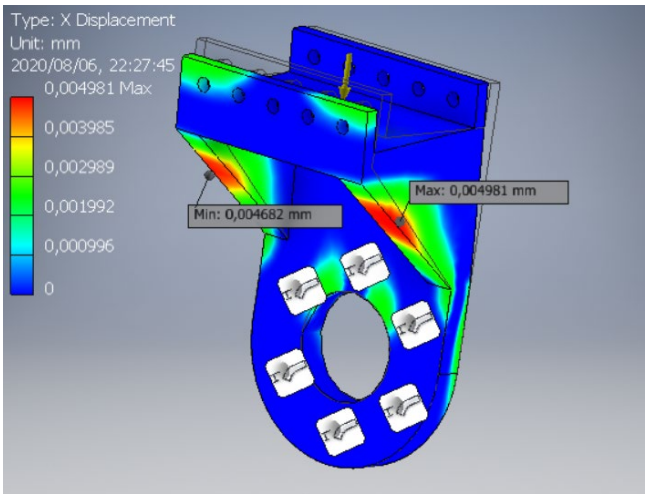

Figure 12. Rear and Front Swivel Support Bracket X-Displacement Deflection simulation (Mafokwane, et. al., 2019).

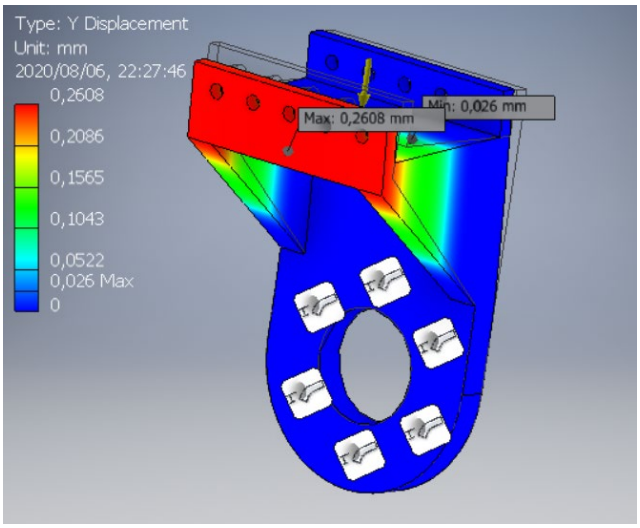

Figure 13. Rear and Front Swivel Support Bracket Y-Displacement Deflection simulation (Mafokwane, et al., 2019).

7.1. Rear and Front Swivel Support Bracket Simulation Discussion

Material chosen for manufacturing of front swivel & rear support bracket and technical design modelling of the component in terms of shape and dimensions is valid as it has been verified through Autodesk Stress Analysis. According to the component's physical properties, yield strength is 760 MP and the maximum Von Mises stress induced by the component is 755.754 MPa giving us a safety factor of 1.01. Support brackets is formed by means of fabrication of 40 mm steel plates to form a strong reinforced supportive structure hence it has been observed from result summary table, that the maximum deflection is 0.004981 mm under remote point load. It can be concluded that the designed Rear and Front Swivel Support Bracket is reliable and that its operational' life span will last, (refer to Table 8, Factor of Safety related to Stress).

Table 5. Rear and Front Swivel Support Bracket Software Material Physical Properties (Mafokwane, et al., 2019)

Name	Steel, Mild, Welded	
General	Mass Density	7,85 g/cm^3
	Yield Strength	207 MPa
	Ultimate Tensile Strength	345 MPa
Stress	Young's Modulus	220 GPa
	Poisson's Ratio	0,275 ul
	Shear Modulus	86,2745 GPa
Part Name(s)	HUB BRACKET.ipt	

Material	Steel, Mild, Welded
Density	7,85 g/cm^3
Mass	78,8227 kg
Area	660213 mm^2
Volume	10041100 mm^3
Center of Gravity	x=0,00088221 mm y=208,568 mm z=74,3887 mm

Table 6. Rear & Front Swivel Support Bracket Simulation report summary (Mafokwane, et al., 2019).

Name	Minimum	Maximum
Volume	10041100 mm^3	
Mass	78,8227 kg	
Von Mises Stress	0,0569262 MPa	755,754 MPa
1st Principal Stress	-179,256 MPa	215,535 MPa
3rd Principal Stress	-942,627 MPa	58,1363 MPa
Displacement	0 mm	0,403333 mm
Safety Factor	~~0,273899 ul~~	15 ul
Stress XX	-305,673 MPa	136,491 MPa
Stress XY	-100,644 MPa	94,6935 MPa
Stress XZ	-116,726 MPa	165,258 MPa
Stress YY	-526,885 MPa	106,127 MPa
Stress YZ	-30,1799 MPa	414,096 MPa
Stress ZZ	-593,236 MPa	136,979 MPa
X Displacement	-0,00468223 mm	0,00498121 mm
Y Displacement	-0,260761 mm	0,025957 mm
Z Displacement	-0,00994305 mm	0,313005 mm
Equivalent Strain	0,000000220781 ul	0,00316961 ul
1st Principal Strain	0,0000000901073 ul	0,00111162 ul
3rd Principal Strain	-0,0037194 ul	-0,000000135153 ul
Strain XX	-0,000559427 ul	0,000358539 ul
Strain XY	-0,000583278 ul	0,000548792 ul
Strain XZ	-0,00067648 ul	0,000957746 ul
Strain YY	-0,00127129 ul	0,000408708 ul
Strain YZ	-0,000174906 ul	0,00239987 ul
Strain ZZ	-0,00165583 ul	0,000380224 ul

8. Split Joint Steering Shaft

Split joint steering shaft experiences bending stress at the top end section. The bending stress is transmitted through the steering clamp bracket from the steering cylinder, (as shown in Figures 14 & 15). That is creating a steering effort of 278.49 kN. Correct material for the shaft and bending moment of 128.1 kN.m is used for simulation of the shaft (Mafokwane and Kallon, 2020).

Figure 14 - Split Joint Steering Shaft Simulation Fixed Constraints & Forces (Mafokwane, et al., 2019).

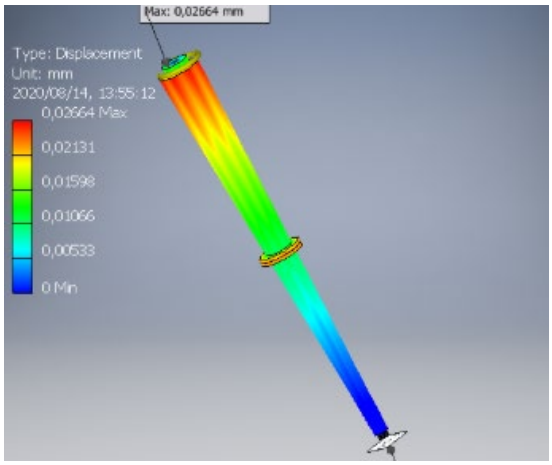

Figure 15 - Split Joint Steering Shaft Deflection Simulation.

8.1. Split Joint Shaft Simulation Discussion

Material chosen for manufacturing of the split joint shaft and technical design modelling of the component in terms of shape and dimensions is valid as it has been verified through Autodesk Inventor's Stress Analysis. According to the component's physical properties, yield strength is 207 MP and the maximum Von Mises stress induced by the component is 5.513 MPa giving us a safety factor of 15 ul. It has been observed from result summary table, , that the maximum deflection is 0.000141 mm under steering effort load. It can be concluded that the designed steering clamp bracket is reliable and that its operational' life span will last.

Table 7 - Split Joint Shat Simulation Summary (Mafokwane, et al., 2019).

Name	Minimum	Maximum
Volume	23899700 mm^3	
Mass	187,613 kg	
Von Mises Stress	0,00494017 MPa	5,51293 MPa
1st Principal Stress	-0,478937 MPa	3,75071 MPa
3rd Principal Stress	-4,05409 MPa	0,225034 MPa
Displacement	0 mm	0,026639 mm
Safety Factor	15 ul	15 ul
Stress XX	-3,20165 MPa	3,02239 MPa
Stress XY	-2,77458 MPa	2,8386 MPa
Stress XZ	-2,85802 MPa	2,83671 MPa
Stress YY	-1,85513 MPa	2,00857 MPa
Stress YZ	-0,917423 MPa	0,924027 MPa
Stress ZZ	-2,24088 MPa	2,01958 MPa
X Displacement	-0,000146581 mm	0,000140993 mm
Y Displacement	-0,026639 mm	0,0264662 mm
Z Displacement	-0,0265661 mm	0,0265998 mm
Equivalent Strain	0,0000000262793 ul	0,0000213011 ul
1st Principal Strain	0,00000000411018 ul	0,0000179219 ul
3rd Principal Strain	-0,0000189497 ul	-0,0000000185943 ul
Strain XX	-0,0000124059 ul	0,0000120466 ul
Strain XY	-0,00001608 ul	0,000016451 ul
Strain XZ	-0,0000165635 ul	0,00001644 ul
Strain YY	-0,000007571 ul	0,0000079045 ul
Strain YZ	-0,00000531688 ul	0,00000535515 ul
Strain ZZ	-0,00000922981 ul	0,0000076111 ul
Contact Pressure	0 MPa	0,241647 MPa
Contact Pressure X	-0,103542 MPa	0,143942 MPa
Contact Pressure Y	-0,192982 MPa	0,202494 MPa
Contact Pressure Z	-0,21318 MPa	0,201775 MPa

9. Factor of Safety

Factor of safety expresses how much stronger a system is than it needs to be for an intended load. Safety factors are often calculated using detailed analysis because comprehensive testing is impractical on many projects, such as bridges and buildings, but the structure's ability to carry a load must be determined to a reasonable accuracy as shown in Table 8 (Engineering Toolbox, 2019).

Table 8 - Factor of Safety related to Stress (Engineering Toolbox, 2019).

Applications	Factor of Safety - *FOS* -
For use with highly reliable materials where loading and environmental conditions are not severe and where weight is an important consideration	1.3 - 1.5
For use with reliable materials where loading and environmental conditions are not severe	1.5 - 2
For use with ordinary materials where loading and environmental conditions are not severe	2 - 2.5
For use with less tried and for brittle materials where loading and environmental conditions are not severe	2.5 - 3
For use with materials where properties are not reliable and where loading and environmental conditions are not severe, or where reliable materials are used under difficult and environmental conditions	3 - 4

Factor of safety equation,

$$Factor\ of\ \ Safety = \frac{yield\ stress}{working\ stress} \quad \ldots\ldots\ldots\ldots\ldots\ldots\ldots\ldots\ldots\ldots\ldots\ldots \quad (1)$$ (Engineering Toolbox, 2019)

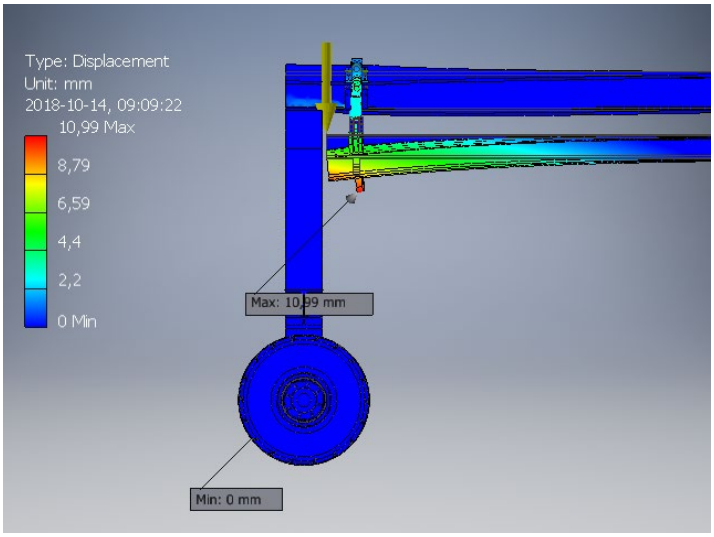

Figure 16. Displacement (Mafokwane and Kallon, 2019).

10. Conclusion

In conlusion, the main objective of this research has been achieved through the design and development of the new proposed MHS that is capable of replacing the use of very big forklift trucks within indoor manufacturing companies. Large forklift trucks rely on ICE power source which unfortunately poses health risks to workers. ICE produces exhaust fumes (CO) while running. Exhaust fumes are harmful to human health. Therefore, the research beacame a success whereby a new proposed MHS has been designed using Autodesk Inventor Professional and material selection of the new design system's components has been carried out and verified in relation with their strength & reliability properties. Through this paper and its engineering analysis, it is proven that the use of internal combustion engines in heavy duty handling systems that are operated within indoor manufactring factories and or internal logistics can be eliminated and replaced with an eco-friendly hydraulic systems technology. Therefore, this new system design promotes Occupational Health and Safety of people working in industrial areas where Bulk Material Handling systems are in place (Mafokwane, et al., 2019).

The simulation and technical modelling of the new system design through engineering calculations shows that the new design can handle 20-ton load capacity (as shown in Figure 16). Results summary very minimal deflection and Von Mises stress values. The systems induce a deflection of 5.325 mm and Von Mises stress of 174.125 MPa giving a safety factor of 4.36 ul under full load capacity (Mafokwane and Kallon, 2019).

References

J. Apple, *Material Handling System Design*, New York: Ronald, 1972.

N. Bintang, "*Deflection Limits for Crane*," SCRIBD, [Online]. Available: https://www.scribd.com/doc/186236855/Deflection-Limits-for-Crane. Accessed on August 12, 2020.

Health &. Safety, "*Prevention of carbon monoxide poisoning from petrol- and gas-powered equipment*," Chamber of Commerce and Industry Western Australia, 2008.

Joseph E. Shigley, *Standard Handbook of Machine Design*, New York: McGraw-Hill, 1996.

S.Z. Mafokwane, D.V.V. Kallon, M. Nkosi, F. Chiromo. Design of a Tri-Adjustable Automated Heavy Duty \Handling System based on Industry 4.0 Principles. *Procedia Manufacturing*. Volume 35, 2019. Pp 187 – 196.

S.Z. Mafokwane and D.V.V. Kallon., Hydraulic System Design of a Tri-Adjustable Automated Heavy-Duty Handling System Based on Industry 4.0 Principles. *2019 Open Innovations (OI),* 2019. Pp 420 - 424.

Mafokwane S.Z., Kallon D.V.V. Design of electro-hydraulic circuits for tri-adjustable automated heavy-duty industrial handling system. *Proceedings of the International Conference on Industrial Engineering and Operations Management. 2*020. 59. Pp 357 – 367.

Mafokwane S.Z 2021a.. Design of a Tri-Adjustable Automated Heavy-Duty Handling System Based on Industry 4.0 Principles. *Masters dissertation submitted to the University of Johannesburg*.

Mafokwane S.Z., Kallon D.V.V. Performance Analysis of a Tri-Adjustable Automated Heavy-Duty Handling System Designed on Industry 4.0 Principles. *Proceedings of the International Conference on Industrial Engineering and Operations Management. 2*021. Pp 2910 - 2921.

D. Mulcathy, *Materials Handling Handbook*, New York: Mcgraw-Hill, 1999.

G. P. Nikishkov, "*Introduction to Finite Element Method*," University of Aizu, Japan, 2004.

. ToolBox, "*Factors of Safety*," 2010. [Online]. Available: https://www.engineeringtoolbox.com/factors-safety-fos-d_1624.html. Accessed on August 15, 2020.

Westinghouse, *Practical Mechanical Drawing and Machine Design*, Chicago: Federick. J Drake & CO. Publishers, 1907.

Wikipedia, "*Factor of safety*," 2020. [Online]. Available: https://en.wikipedia.org/wiki/Factor_of_safety#Definition. Accessed on August 15, 2020.

Biographies

Shaun Zamawelase Mafokwane is a PhD candidate at the University of Johannesburg, Department of Mechanical and Industrial Engineering. Shaun is currently employed by Tetra Pak SA Pty Ltd and works as an Electro-Mechanical Service Engineer. He earned a National Diploma, a BTech degree, and MPhil in mechanical engineering from the University of Johannesburg. He is a member of the Institution of Certified Mechanical & Electrical Engineers and he is currently completing his GCC examination.

Dr Daramy Vandi Von Kallon is a Sierra Leonean holder of a PhD degree obtained from the University of Cape Town (UCT) in 2013. He holds a year-long experience as a Postdoctoral researcher at UCT. At the start of 2014 Dr Kallon was formally employed by the Centre for Minerals Research (CMR) at UCT as a Scientific Officer. In May 2014 Dr Kallon transferred to the University of Johannesburg as a full-time Lecturer and later a Senior Lecturer in the Department of Mechanical and Industrial Engineering Technology (DMIET). Dr Kallon has more than twelve (12) years of experience in research and six (6) years of teaching at University level, with industry-based collaborations. He is widely published, has supervised from master's to Postdoctoral and has graduated seven (7) Masters Candidates. Dr. Kallon's primary research areas are Acoustics Technologies, Mathematical Analysis and Optimization, Vibration Analysis, Water Research and Engineering Education.