THE UNIFY OF ONLINE USER BEHAVIOR AND CHARACTERISTICS OF TECHNOLOGY ON DECISION TO CHOOSE MOBILE NETWORK OPERATOR (MNO)

Widya Granita
Doctoral Program
Mercu Buana University
Jakarta, Indonesia
granitawidya@gmail.com

Abstract

Nowadays, market saturation in the telecommunications industry creates a hyper-competition impacted on Mobile Network Operators (MNO) business. There is a phenomenon for using more than one cellular card with different MNOs. MNO have to keep users and attract them to add second cellular cards, as well as acquiring users who want to change the MNO. Therefore, the decision to choose a mobile network operator based on motivation and technology fit to fulfill their utilitarian and hedonic needs was required. This study aims to find the concept of a decision to choose MNO based on the suitability of online consumer behavior motivation with the characteristics of technology as the main determinant factors. This research conducted in Jakarta, with 200 respondents of prepaid and postpaid users from five licensed MNO in Indonesia. The study uses the Structural Equation Model (SEM) to determine the pattern of the effects between exogenous towards endogenous variables directly or indirectly, to understand the variables relation pattern. The results showed that: (1) motivation affects positively and significantly to the decision to choose MNO; (2) technological characteristics affects positively and significantly to the decision to choose MNO; (3) Motivation affects to characteristic of technology affects positively and significantly; (4) characteristics of technology is able to mediate the relationship between motivation on the decision to choose MNO. By unifying the motivations and characteristics of technology, MNO can provide the mobile services that compatible with cellular technologies in terms of network and value-added services to meet the requirement of users, both for utilities and services that support promotion (hedonics).

Keywords:
Online user behavior, Characteristics Technology, Cellular Network Operators, Consumer Decision

1. Background

The existence of mobile services is currently experiencing dynamic development rapidly. At the beginning of year 2020, (Hootsuite We're Social 2020) reported that internet user penetration have reach 4.54 billion, and 5.19 billion (67% of the world's population of 7.7 billion) were the cellular service users. Of the 272.1 billion total population in Indonesia, 338.2 are cellular service users. This implies that the ratio of cellular card users to the population is 124%, which is there are users that have more than one card for voice and SMS services (legacy services), and for mobile data services with different cellular cards. Besides, according to (Ministry of Communication and Informatics 2018) many prepaid cards are not registered correctly by users for the reason of one-time use to get internet quota promo packages from starter packs. Besides, prepaid and postpaid cellular card for data that used by the Indonesian people reached 392.78 million units.

In Indonesia, there are five cellular operators licensed to conduct cellular business based on the Global System for Mobile Communication (GSM). The three largest cellular operators are Telkomsel, Indosat Ooredo, and XL Axiata, followed by 3-Hutchinson, and Smartfren (Ministry of Communication and Informatics 2018). A specific change factor in the cellular industry is an increase in traffic using cellular data services but a constant decrease in revenue from voice service traffic, so that the Average Rate Per User (ARPU) decreases from year to year (Dirjen SDPPI Ministry of Communication and

Informatics 2018). Increased data service traffic occurs as a direct result of the spread value-added services (value-added services) by over-the-top application providers.

The popularity of bandwidth services such as video streaming and peer to peer, followed by the emergence of more accessible data packages at an affordable price, as well as the increase of popular social networking services (some of which include multimedia applications such as photo and video sharing), and smartphone diffusion which is easy to use to access the internet are making mobile internet services as part of daily life. On the other hand, cellular operators experienced a decline in voice service revenues due to market saturation accompanied by the emergence of voice-over-IP (VoIP) services (Shin 2012). Also, cellular operators were faced with complementary technology provided by internet service providers in the form of WiFi (Wireless Fidelity) services. According to (Sujata et al. 2015), stated that the OTT application provides audio, video, and other media services via the internet are passes through cellular networks without requiring business cooperation or technology affiliation with cellular operators. OTT applications are supported by sophisticated technological devices and using open source platforms, providing innovative services with cutting-edge functions such as search engines, video and messaging as well as voice applications and various other types of electronic transactions.

Thus MNOs are required to continue to develop various technologies based on IP Multimedia Subsystem (IMS) to provide value-added data services. This situation makes the cellular operators become dump pipes that only create a service value by providing infrastructure, or switch to innovative communication service providers that cannot be replicated by internet providers. For this reason, cellular operators must find new opportunities in a mobile ecosystem that changes continuously and simultaneously through the development of data service innovations in line with technological developments. The convergence of fixed-mobile networks using Internet Protocol (IP) networks enables cellular operators to provide greater control over the quality of communication services, which generally still lack VoIP services from Internet providers (Cuevas et al. 2006; Nguyen et al. 2001). Cellular operators are ready to serve customers anytime and anywhere to retain existing customers, as well as get new customers. By knowing consumer purchasing preferences and behavior, cellular operators can develop innovative services to survive in a competitive market (Vijay and Krishnaveni 2016).

Another challenge is that in the telecommunications market, especially cellular that is very mature, MNO requires the right strategy to attract new customers, existing customers that already have a second SIMCard, or attract a new customer that switch from other MNOs. From the users' perspective, to change mobile network operators is low in cost (Liu, Guo, and Lee 2011) and easily switch from one cellular operator to other devices provided by other cellular operators or internet service providers. There are two aspects of services that influence the decision to continue to choose MNO, namely what makes users continue to choose the same MNO, and the costs incurred to switch to another MNO (Liu, Guo, and Lee 2011). In the cellular telecommunications industry, networks are the core business that underlies mobile communication services. Along with the development of cellular technology in the form of increased bandwidth and access speed, mobile cellular operators can provide a variety of data services such as additional features from the previous service (Ju 2011). Technological innovation is a major component in the telecommunications industry (Fernández and Usero 2009).

Besides, the emergence of mobile devices that adapted for internet use (i.e. smartphones and tablets) and the diffusion of content that consumes many data services such as streaming video, encourages the use of data services in mobility (West and Mace 2010; De Reuver, Ongena, and Bouwman 2013). Also, MNO have to face an innovation and investment in cellular network technology infrastructure to increase the availability and quality of data services with higher access speeds (Ghezzi, Cortimiglia, and Frank 2015). The situation of a hyper-competitive makes MNOs must focus on target cellular service users so that a new customer can be acquired, and existing users do not switch to other MNOs even though the cellular technology are updates. It's been a sharp competition in the telecommunications industry in Indonesia, making it easier for customer to switch to other MNO services for various mobile internet services. Users can use several cellphones, even the same cell phone using access networks from different MNOs. It shows that the rapid development of technology and device features, with a competitive price will increase a cellphone ownership or more than one cell phones usage. As a result, consumers can use more than two MNOs and easily switch MNO competitors quickly.

With the phenomenon of combined effects of user perspectives, the increase of cellular network traffic and infrastructure investment, also the development of value-added services as well as technological advancements in cellular devices, it is necessary to find the concept of online user behavior and the technological characteristics fit that becoming the ultimate determinant in the decision to choose MNOs.

2. Literature Review

Online User Behavior

There is no doubt that the digital revolution is one of the most powerful influences on consumer behavior and shapes an online consumer behavior. According to (Cheung, Chan, and Limayem 2005), the initial studies in online consumer behavior mostly sought to explore how consumers adopt and use online services. The cellular telecommunications market is growing rapidly in line with shifting in consumer behavior to adopt mobile services provided by mobile network operators (Gerpott, Thomas, and Weichert 2013). Nowadays, consumers in mature cellular market, in term of experienced and knowledgeable cellular technology available in technological solutions over the past few decades, which resulted a changes in the criteria for adoption of cellular services (Constantiou 2009).

According to (Cetină, Munthiu, and Rădulescu 2012), the impact of used data services in society will continue to broad marked by the increasing the number of mobile internet users. This will cause a major change in consumer behavior that have been influenced by a variety of heterogeneous factors. To realize a success in this dynamic and rapidly growing market, mobile operators need to know everything about consumers: what they want, what they think, how the consumers works and how consumers fill their free time. Also, mobile network operators must understand the personal and group factors that influence consumer decisions, and how decisions are made to choose a mobile network operator. As media/gadgetry choices increased, mobile operators not only have had to identify the target consumers, but also need to know where and how to reach them (Schiffman and Wisenbilt, 2015). In cyberspace, consumer choices have strongly influenced by virtual groups and become consumer trust in the environment.

(Cheung, Chan, and Limayem 2005) stated that the factors affects online consumer behavior are (1) individual consumer characteristics (motivation, perception), (2) environmental aspects (law and regulation), (3) product and service characteristics (quality and type of service, level of knowledge consumers for services), (4) online environment characteristics (online transaction quality attributes, eligibility, security, ease of use, and characteristics of technology, high speed of access from cellular networks) and (5) cellular application services. According to (Cheung, Chan, and Limayem 2005), determinant of the main aspects of online consumer behavior consist of:

(1) Individual characteristics, the impact on the intention and adoption of cellular services, such as motivation and personal innovation, that explain purchase intention by a consumers. It is also influenced by consumer demographics on online purchases, as well as repeated online purchases, determined by consumer trust and consumer satisfaction which are the key to continuance usage.
(2) Environmental factors, that refer to the structural influence of the electronic trading environment including uncertainty, competition, and concentration.
(3) Product/service characteristics, that refer to product knowledge, product type, frequency of purchase, tangibility, differentiation, and price. Besides, the price value that has a significant impact on purchase intentions and the adoption of online purchases and vice versa. The value of price, quality, and type of products are the three elements in forming online consumer perception.
(4) Characteristics of technology, including ease of use, usability, quality, security, and reliability as well as interfaces (devices), network speed; reliability, and network compatibility.
(5) Characteristics of intermediaries, including web design and navigation, information quality, search attributes also influence intentions and adopt online services.

Purchase and consumption motivation classified into two types, namely hedonic and utilitarian motivation. Hedonic motivation based on spontaneous values, while utilitarian motivation based on the value of consciousness (Babin, Darden, and Griffin 1994). It reflects the difference between taking action "to get something", instead of doing it because "liking" it. Utilitarian motivation is the ability of consumers to perform functions in everyday life (Chowdhary and Prakash 2001). It shows that utilitarian motivation reflects purchase made to meet the needs of carrying out work that is through the uses and benefits obtained efficiently, specifically and economically (Holbrook and Hirschman 1982). Utilitarian consumer behavior was described as a functional point of view on the task and considered as a job (Babin, Darden, and Griffin 1994). Utilitarian purchasing motives include the desire for utility, the search for quality products or services, and affordable prices.

Hedonic motivation is more subjective and personal and results in pleasure and comfort. Consumers with motivations based on hedonic needs involve multisensory, fantasy, and emotional purchasing activities (Keelson 2012). Hedonic motivation

can be associated with fun and playfulness rather than completing tasks, enjoying the buying process, and socializing with others to strengthen his self-image, especially in the environment he believes in (Holbrook and Hirschman 1982). According to (Chang et al. 2013), in various studies, the process of technology acceptance is based on the theory of intrinsic motivation (hedonic) and extrinsic motivation (utilitarian). One of them is the TAM extended by (Venkatesh and Davis 2000), emphasizing the impact of utilitarian motivation on perceived ease of use and perceived usefulness. Further empirical studies were expanded by examining the effect of hedonic motivation on acceptance of TAM-based technology, resulting in findings of hedonic motivation influencing user intentions and behavior, while utilitarian motivation influences the use of technology (Lee, Cheung, and Chen 2007). The consumption motive was further studied by other researchers such as (Okada 2005; Chitturi et al. 2008; Chitturi, Raghunathan, and Mahajan 2007), the term "utilitarian benefits" generally refers to the benefits of offering functional, instrumental, and practical consumption and was considered to be closer to the needs. Whereas "hedonic benefits" refer to the aesthetic benefits, experience, and enjoyment because they were considered as being closer to luxury or desire.

Characteristics of Technology

(Wareham, Levy, and Shi 2004) stated that the dominant technology influence on the use of products or services. With an advanced of technology in information and communication, Web 2.0 applications were used to build an online platform, a place to share messages, knowledge, and communication (Chen, Chang, and Chen 2017). The length of time a consumer takes in adopting technology is not the same, depending on the characteristics of the technology or innovation. The length of time a consumer takes in adopting technology is not the same, depending on the characteristics of the technology or innovation. (Schiffman and Wisenblit 2015), states that the innovation characteristics of (Rogers 1995) affect the use of new products, namely:

1) Relative advantage: the extent to which potential consumers were considering new products to be superior to existing products. For example, the advantages of cell phones that allow users to communicate more easily and comfortably.
2) Compatibility, the rate at which consumers feel a new product is consistent in meeting their needs, also according to the current value.
3) Complexity is the degree to which new products are difficult to understand and use. It is very clear that a product/service is easier to use, the easier it is to be accepted. Therefore the complexity of technology is the most widespread concern (Higgins et al. 1992).
4) Trialability refers to the degree to which new products can be tried in a limited environment. The greater the opportunity to try new products, the easier it is for consumers to evaluate the product and choose to use it.
5) Observability (Communicability) ease the benefits of a product that can be observed, imagined, or explained to consumers. Tangible products are more easily introduced than intangible products such as services.

The characteristics of technology in this study was adapted from the diffusion of innovation theory (Rogers 1995), innovation characteristics of network quality as an embodiment of technological innovation compatibility with access speeds and coverage that allow users to get data services without interruption. Mobile service excellence represents the relative advantage, where cellular operators can provide superior services based on the latest technology. It includes network effects reflecting communicability and complexity, which affect consumers in interacting socially and between individuals. It also has the flexibility to exchange access media such as mobile network operator to exchange with wi-fi networks that are complementary to cellular technology.

Decision to choose mobile network operator

In decision making, the Task-Technology Fit (TTF) model was developed to understand the motivation of users in choosing and evaluating mobile services (K.-Y. Lin and Lu 2015), where an individual needs to fulfill with technological suitability and motivation to meet the needs (Dishaw and Strong 1998). In research (Goodhue and Thompson 1995) Task Technology Fit is used to assist in making decisions about choosing IT services. (Liu, Guo, and Lee 2011) interpret that the concept of 'fit' is an indication of the suitability and unity of perspective between the motivation of individual needs and purchasing decisions. Fit operationalization approach is the compatibility between task and technology, and the suitability of the technology service functions used. Some researchers namely (Kwai Fun IP and Wagner 2008; K. Y. Lin 2016; Yen et al. 2010) stated that TTF theory is very important to explain consumer behavior when using information technology services. (Kwai Fun IP and Wagner 2008) state that needs are determinants that influence the use of technology services, thus changing tasks to become user motivational.

The decision to choose a mobile network operator in this study represents the synthesis of a sub-purchasing decision (Kotler and Keller 2012), namely the selection of a cellular operator's brand or product, distributor, method of payment. The realization of the TTF dimension (Goodhue and Thompson 1995), namely: data quality, location, authorization, data systems, training and ease of use, and time. Besides, the decision to choose a mobile network operator in this study is based on the fit of the user requirements with the characteristics of cellular network functions that accessed through a device (Negahban and Chung 2014). The concept of fit in the context of cellular technology, (Gebauer et al. 2005) identifies 5 factors that are appropriate for cellular services, namely: voice communication, mobile office, support for knowledge, productivity and versatility, wireless features, and network stability).

3. Methodology

Conceptual Framework

This study aims to determine the effect of consumer behavior, namely motivation and technological characteristics in choosing MNOs. Consumer decisions were made with thoughts adapted from Task-Technology Fit (Goodhue and Thompson 1995). Quantitative approaches are used to identify all concepts that are the objectives of the research (Malhotra and Naresh, 2010). Quantitative approaches are used to identify all concepts that are the objectives of the research (Malhotra and Naresh 2010). In quantitative research, researchers try to test the theories used by specifying hypotheses and then proceed by collecting data to support or refute the theory. Data is collected through the preparation of special instruments designed to assess behavior and information and then analyzed using statistical procedures and hypothesis testing. A descriptive approach was taken to understand and describe the factors that are considered by consumers in shaping the behavior of using mobile services. The next step is to test the hypothesis and explain the causality relationship between the independent variables and the dependent variable, which is knowing how much influence the factors have in the decision to choose MNO.

Population and Samples

In this study, we use the population of prepaid and postpaid cellular card users from cellular operators licensed in Indonesia, namely Telkomsel, XL-Axiata, Indosat-Ooredo, and 3-Hutchinson, and Smartfren who are domiciled in Jakarta. The data used in this study comes from samples that were expected to represent the behavior of the population. Jakarta was chosen as the main location for sampling by considering that all forms of new services and existing services require improved mobile infrastructure support always available. (Malhotra and Malhotra 2013) and (Hair et al. 2007) state that the sample size can be determined by multiplying the number of observable variables (indicators) by five. This study uses 200 samples. Sampling in this study was conducted using a non-probability sampling method with a purposive sampling technique.

Classification of Variables Research

This study consists of (1) the decision variable to choose MNO which consists of technology compatibility with the needs and compatibility of the device function with technology (exogenous variable), (2) motivation needs, namely utilitarian and hedonic users as the dependent variable (endogenous variable) and (3) Characteristics of technology, based on the characteristics of Rogers innovation namely compatibility and relative advantages. Data obtained from the questionnaire distribution survey and measured using a Likert scale 1-5, where number 1 states strongly disagree, up to number 5 (very much agree) (Likert 1932).

Model Analysis

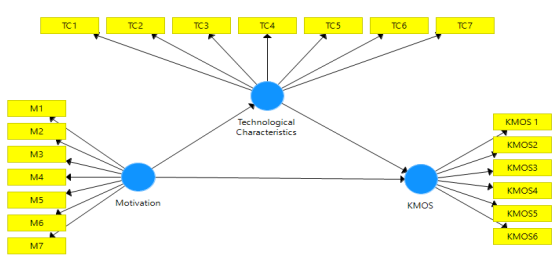

Figure 1. Research Model

This study aims to provide a decision model for selecting MNOs that are influenced by motivational needs and technological characteristics. Motivation needs to encourage individuals to fulfill their needs. The technological characteristics of cellular services are fit to meet utilitarian and hedonic needs, and the compatibility of technology functions makes easier to carry out the task of fulfilling those needs. The framework of the research presented in Figure 4.1. This study uses Structural Equation Model (SEM) data analysis techniques. According to Ferdinand (2002), SEM is very suitable for: (1) confirming the un-dimensionality of various indicators for dimensions or construction, (2) testing the compatibility or accuracy of the model based on observed empirical data, (3) compatibility of the test model and the causal relationship between factors observed or built into the model. Complete modelling consists of measurement models and structural models. The purpose of the outer model testing is to determine the relationship between latent variables and indicators, or it also can be said that the outer models determine how each indicator is related to the latent variable. While the purpose of testing the inner model is the relationship structure model, which forms or explains the causal relationship between variables.

3.5. Hypothesis

Based on the results of previous studies that presented in the literature review and research models, we develop the following hypotheses:

1. Motivation (M) affects the decision to choose MNO (KMOS) positively and significantly
2. Motivation (M) affects technological characteristics (TC) positively and significantly
3. Technology characteristics (TC) the decision to choose MNO (KMOS) positively and significantly
4. Technology characteristics (TC) able to mediate the relationship between Motivation (M) on the decision to choose KMO (KMOS) significantly

4. Result & Discussion

Descriptive test result

The demographic profile of the respondents is shown in Table 1. The majority of respondents were women (54.26%), age no more than 25 years old (21.32%), students (72.48%), respondents mostly had no more than one cellular card (65.12%), and the majority use Telkomsel mobile network operators (53.01%) and with the length of subscription more than 6 months (93.8%).

Table 1. Profile of Respondents

Profile	Criteria	Total
Responden		**200**
Gender	Male	45.74
	Female	54.26
Age	<25 y.o	78.68
	26 - 35 y.o	21.32
Occupations	Student	72.48
	Employee	27.52
MNO Used	XL	20.30
	3-Hutch	9.02
	Telkomsel	53.01
	Smartfren	2.63
Length of stay	<6 bulan	6.20
	>6 bulan	93.80
Using >1 MNO	Yes	65.12
	No	34.88

Results of SEM Analysis
Outer Model Test

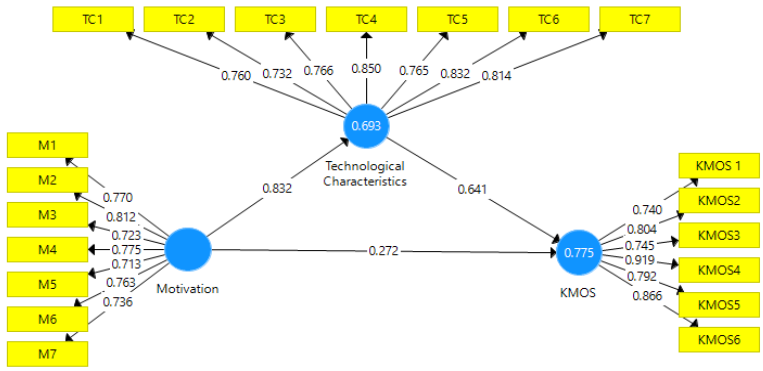

Figure 2. Outer Model PLS

The outer model is a model that specifies the relationship between latent variables with the indicators. The outer model defines an indicator relates to its latent variable. The Outer model interpreted by looking at several things, including convergent validity, discriminant validity, composite reliability, Average Variance Extracted (AVE), and Cronbach's alpha. The PLS Algorithm model presented in the figure 2.

a. Convergent Validity

The convergent value is to measure the amount of loading factor for each latent variable. Loading factors above 0.70 were strongly recommended, but above 0.60 can still be tolerated as long as the model is still in the development stage. Table 2 shows the results of convergent validity analysis that the 20 indicators of the model have a Loading Factor value (λ) > 0.70 so that it means Valid or interpreted that the indicator can measure and construct its latent variable.

Table 2. Value of Loading Indicator

Indikator	KMOS	Motivation	Technological Characteristics
KMOS 1	0,740		
KMOS2	0,804		
KMOS3	0,745		
KMOS4	0,919		
KMOS5	0,792		
KMOS6	0,866		
M1		0,770	
M2		0,812	
M3		0,723	
M4		0,775	
M5		0,713	
M6		0,763	
M7		0,736	
TC1			0,760
TC2			0,732
TC3			0,766
TC4			0,850
TC5			0,765

TC6			**0,832**
TC7			**0,814**

b. Discriminant Validity

The discriminant value was used to assess whether the variable has adequate discriminatory validity, namely by comparing the correlation of indicators with the intended construct must be greater than the correlation with other constructs. If the correlation indicator has a higher value than the correlation indicator with other constructs, then it can be said that the variable has high discriminant validity. This value can be seen in the cross-loading factor value on Table 3. The results of the Discriminant Validity Analysis showed that the Loading Factor (λ) value of each indicator has a higher value than the Cross Loading value. This suggests that the indicator can measure the latent variable that is greater than the latent variables**.** Table 4.2 shows the value of the indicator KMOS1 loading factor for constructors' decision to choose an operator obtained the value of technological characteristics (TC) is 0.740 higher than the value of M (motivation), which is 0.608. It repeated on KMOS2-6, which have the highest loading value as a construct of the decision to choose MNO while the motivation construct is 0.608. On the M1 indicator, the construct work motivation's loading value is 0.770 while the other constructs are technological characteristics 0.0.24, and the decision to choose a cellular operator is 0.593. Likewise, for other indicators M2 - M6 has a higher loading value for the desired construct rather than the unwanted construct.

Table 3. Value of Cross Loading

	KMOS	Motivation	Technological Characteristics
KMOS1	**0,740**	0,608	0,690
KMOS2	**0,804**	0,675	0,698
KMOS3	**0,745**	0,605	0,642
KMOS4	**0,919**	0,716	0,767
KMOS5	**0,792**	0,641	0,665
KMOS6	**0,866**	0,679	0,761
M1	0,593	**0,770**	0,624
M2	0,667	**0,812**	0,658
M3	0,584	**0,723**	0,614
M4	0,648	**0,775**	0,678
M5	0,578	**0,713**	0,554
M6	0,562	**0,763**	0,601
M7	0,623	**0,736**	0,668
TC1	0,657	0,664	**0,760**
TC2	0,684	0,560	**0,732**
TC3	0,648	0,626	**0,766**
TC4	0,735	0,720	**0,850**
TC5	0,668	0,640	**0,765**
TC6	0,722	0,690	**0,832**
TC7	0,677	0,690	**0,814**

c. Composite Reliability

A high value of composite reliability shows a good consistency of each indicator in latent variables to measured variables. The composite reliability criterion value> 0.7 indicates that the variable has good internal consistency. Values of composite reliability are presented to accord the following table 4.

Table 4. Value of Composite Reliability

	Composite Reliability
KMOS	**0,921**
Motivation	**0,903**
Technological Characteristics	**0,920**

Table 4 shows the result values of the composite reliability construct for the decision to choose MNO is 0.921, motivation 0.903, technological characteristics 0.920. The three latent variables have a value of CR> 0.70 where illustrates the indicators that use in the study have a good value of consistency (Reliable).

d. Cronbach's Alpha

Table 5. Value of Composite Reliability

	Cronbach's Alpha
KMOS	**0,896**
Motivation	**0,875**
Technological Characteristics	**0,899**

Reliability testing is also compared with Cronbach's alpha value >0.70. Cronbach's Alpha analysis results in Table 5 shows the value of KMOS (0.896), motivation (0.875) and TC (0.99) > 0.70. The results of this test support the CR value so that the indicator has a consistency (reliability) that is reliable.

e. Average Extracted Variance (AVE)

Table 6. The Value of Average Extracted Variance (AVE)

	Average Variance Extracted (AVE)
KMOS	**0,662**
Motivation	**0,573**
Technological Characteristics	**0,623**

Table 4.6 shows the results of the analysis of the AVE value of each of the latent variables KMOS, Motivation, and TC are 0.662, 0.573, and 0.623> 0.50. This illustrates that the VALID model and has a higher accuracy value compared to research errors or measurement errors.

Inner Model Test

a. Path Coefficients

The results of the path analysis show that the coefficient M on TC is 0.832 where this value is positive means M has a positive influence on TC. Meanwhile, the path coefficient M to KMOS is 0.272 where this value is positive. it means that M has a positive influence on KMOS. Likewise, the TC path coefficient on KMOS is 0.641 where this value is positive, meaning that TC has a positive influence on KMOS.

Table 7. Path Coeffients and T-Value

	Original Sample (O)	Sample Mean (M)	Standard Deviation (STDEV)	T Statistics (|O/STDEV|)	P Values
Motivation -> KMOS	0,272	0,274	0,060	4,556	**0,000**
Motivation -> Technological Characteristics	0,832	0,834	0,030	27,817	**0,000**
Technological Characteristics -> KMOS	0,641	0,639	0,057	11,192	**0,000**

b. R-Square

As shown in Table 4.7 TC has an R^2 value of 0.693, then the Coefficient of Determination (CD) for TC is 69.3%. This means that the TC variable is influenced by 69.9% by the variable M. While the remaining influence is 100% - 69.35 = 30.65% is the influence of other variables outside this model.

Table 8. R-Square Value

	R Square	R Square Adjusted
KMOS	0,775	0,772
Technological Characteristics	0,693	0,691

KMOS has an R^2 value 0.775 then the Coefficient of Determination (KD) for KMOS is 77.5%. It means that the KMOS is influenced by 77.5% by the M and TC variable. While the remaining influence 100% minus 77.5% = 22.5% is the influence of other variables outside this model.

c. Stone Geiser Value (Q^2)

Table 9. Result of Stone Geiser Value (Q^2)

	SSO	SSE	Q^2 (=1-SSE/SSO)
KMOS	900,000	469,914	0,478
Motivation	1.050,000	1.050,000	
Technological Characteristics	1.050,000	627,513	0,402

The Q^2value of KMOS is 0.478 and TC is 0.402 where the value> 0.0, which means that the motivation variable is a predictor that relevant for predicting KMOS and TC variables.

d. Goodness of Fit Index (GoF)

Average AVE value = 0.619
Average R-Square Value = 0.734
The GoF Index = $\sqrt{0{,}619x0{,}734}$
= $\sqrt{0{,}454}$
= 0,674

This implies that the research model is good since the GoF values entered into the range of 0,38-1,00 and illustrated the high fitness model category.

e. Effect Size

Table 11. Effect Size Test

	KMOS	Motivation	Technological Characteristics
KMOS			
Motivation	0,101		**2,256**
Technological Characteristics	**0,562**		

The size of the effect is obtained from the f2 value where this value illustrates the magnitude effect of the predictor latent variable (exogenous latent variable) on the endogenous latent variable in the structural order. Chin (1988) categorizes the size f2 into three types namely: f2 value of 0.02 categorized as a weak influence, f2 value of 0.15 is categorized as a moderate effect, and f2 value of 0.35 is categorized as a strong influence. The f2 value on Smart PLS 3 is obtained from the calculation of the PLS Algorithm, then interpreted in the Quality Criteria and f square submenu.

M → TC = 2,256 = Strong Effect
M→ KMOS = 0,101 = Medium Effect
TC → KMOS = 0,562 = Strong Effect

f. Hypothesis Test

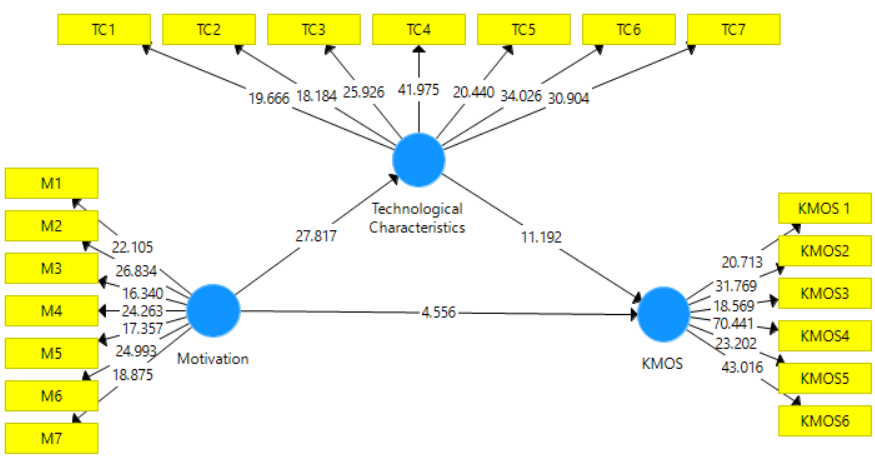

Figure 4.3. T-Value Diagram

The hypothesis test is an analysis to find out the significance affects between independent variable constructs to the dependent variables construct to prove the statement hypothesized. The result significance level of 5% test if the value of t-statistic > 1.96, the null hypothesis (H0) rejected. The t-statistical coefficient of influence on the latent constraint obtained from PLS Bootstrapping. The results of the Bootstrapping PLS Model presented in the figure 4.3 and Table 7.

Hypothesis 1

Motivation affects the decision to choose MNO positively and significantly. The results showed the path coefficient M to KMOS is 0.272 where this value is positive. It means that M has a positive influence on KMOS. The value of T Statistics M on KMOS of 4.556 where this value> 1.96. There is a significant influence between motivation on the decision to choose MNO. Supported by previous research (Yen et al. 2010), dividing the motivation of user needs into (1) information needs (external motives) so-called utilitarians, (2) motivational social needs (internal motives), so-called hedonics. Based on the task technology fit model used (Kwai Fun IP and Wagner 2008), finding user behavior influences the perception of

technological suitability to meet needs as the basis for decisions to choose cellular operators to meet utilitarian and hedonic needs. Hypothesis 1 accepted.

Hypothesis 2

Motivation affects the characteristics of technology positively and significantly. The results showed the path coefficient M to TC is 0.641, the value is positive. The T-value statistics M on TC of 27.817 where this value> 1.96 There is a significant influence between motivation on technological characteristics. In line with research findings (Ahmad 2012), that the motivation of utilitarian and hedonic needs is influenced by the dynamics of sustainable innovation development with different technological characteristics. To some extent, the need for mobile communication services is determined by the solutions to meet the needs of users. The study (Mazzoni, Castaldi, and Addeo 2007) examined various aspects of cellular services such as technological characteristics, value creation, product and service development, and lifestyle. As a result, to understand the specific problems of consumer behavior such as usage motivation is very important to provide input segmentation strategy that can lead to an increase in ARPU. Hypothesis 2 accepted.

Hypothesis 3

Characteristics of Technology affects the decision to choose MNO positively and significantly. The results showed the path coefficient TC to KMOS is 0.272 where this value is positive. The results showed the T-value of TC for KMOS was 11,192 where this value> 1.96. There was a significant influence between technology characteristics on the decision to choose a mobile network operator. (Kleijnen, de Ruyter, and Wetzels 2007) states that the use of the Rogers Adoption of Innovation framework to determine the characteristics of cellular services, namely the relative superiority, compatibility, complexity, and communication capabilities. Compatibility refers to how consumers think about cellular services becoming their daily routine. The routines of consumers 'lives can be used as considerations to find out whether consumers' experiences of using innovation are consistent with their needs, values, and past experiences as feedback. The characteristics of technological innovation, relative advantage, reflect the features of the technology itself (Shaw, Ellis, and Ziegler 2018), where these features can provide a variety of services and data services with more advanced technology.

Hypothesis 4

Technology characteristics are able to mediate the relationship between motivation and decision to choose MNO signifanctly. Calculated using the Sobel test:

$$Z = \frac{ab}{\sqrt{(b^2 SE_a^2) + (a^2 SE_b^2)}}$$

Remarks:
a = coefficient M on TC
b = coefficient influence TC on KMOS
SE_a = standard error M on TC
SE_b = standard error TC on KMOS

$$Z = \frac{0.832\ x\ 0.641}{\sqrt{(0.641^2 x\ 0.030^2) + (0.832^2\ x\ 0.057^2)}}$$

$$Z = \frac{0.832\ x\ 0.641}{\sqrt{(0.641^2 x\ 0.030^2) + (0.832^2\ x\ 0.057^2)}}$$

$$Z = \frac{0{,}533}{\sqrt{(0{,}411 x\ 0{,}0009) + (0{,}692\ x 0{,}0032)}}$$

$$Z = \frac{0{,}533}{\sqrt{(0{,}00037) + (0{,}00221)}}$$

$$Z = \frac{0{,}533}{\sqrt{(0{,}00037) + (0{,}00221)}}$$

$$Z = \frac{0{,}533}{\sqrt{0{,}00258}}$$

$$Z = 10{,}49$$

Based on the Sobel z score of 10.49 is greater than the Z value of 1.98, the hypothesis is accepted, meaning that TC can mediate the relationship between M and KMOS. Motivation will encourage individuals to explore cellular services based on technological characteristics. On the other hand, technology-based services are the mainstay of mobile network operators to attract users to choose those operators. Many factors that can influence human relations with technology, so the use of MNO services by consumers is expected to provide experience according to the motives of usage and give technology-based service satisfaction (Shin and Jin Park 2017). For this reason, technology quality is reflected in the characteristics of technological innovation in this research questionnaire, namely compatibility and relative advantage in services predicted to be the basis for consumers in choosing cellular operators.

5. Conclusion, implication and suggestions

The result of the Outer model test using the convergence test shows that all indicator' loading factor values are greater than 0.70 suggested that the indicators are valid. Discriminant test results show the validity of the loading factor value for each indicator is greater on the desired construct than the accidental construct. It concludes that the indicator has a high discriminant validity value. The results of the composite reliability test showed that the composite reliability values for all variables were greater than 0.70, so it concluded that these variables had good internal consistency. The composite reliability test showed that the composite reliability values for all variables were greater than 0.70, so it concluded that these variables had good internal consistency. While the variance value of each indicator in the constraints obtained AVE values greater than 0.50 so it concluded that the indicators in the construct that can be captured by these variables are more than the variance caused by measurement errors. The reliability test results for each latent variable are obtained for Cronbach Alpha values greater than 0.70, which means the reliability of the four variables was high. The inner model test results obtained that the characteristics of technology have an R2 value of 0.693, then the value of the Determination Coefficient (KD) for TC is 69.3%. t means that the characteristic variable is influenced by 69.9% by the motivation variable. While the remaining influence 100% -69.35 = 30.65% is the influence of other variables outside this model. KMOS has an R2 value of 0.775 then the Coefficient of Determination (KD) for KMOS is 77.5%. This means that the KMOS variable is influenced by 77.5% by the motivational variables of technological characteristics. While the remaining influence 100% - 77.5% = 22.5% is the influence of other variables outside this model. The results of the effect test show that motivation has a strong effect on the characteristics of the technology of 2,256, motivation has a moderate effect of 0.101 on the decision to choose MNO and the characteristics of technology have a strong influence of 0.562 on the decision to choose MNO.

The results of analysis as well as the discussions, we found that (1) characteristics of technology affects the decision to choose a MNO positively and significantly; (2), there is a motivation affects positively and significantly the decision to choose MNO; (3) the characteristics of technology affects the decision to MNO positively and significantly; (4) that the characteristics of the technology can mediate the relationship between motivation and the decision to choose MNO.This research contributes to being a source of information for telecommunications companies in the cellular telecommunications sub-sector and other players in the telecommunications industry ecosystem. The results of the study can be additional information for mobile network operators as a basis for understanding online user behavior so that it can segment the market and create loyal customers. Future studies are expected to use different studies, research methods, measurements, and analysis of different instruments so that they can be seen more varied. The research location is only in Jakarta. Therefore, for further studies, it is expected to be able to use other perspectives in digital business such as producers, content or application developers using each variable in this study so that it can compare with the results of previous studies

References

Ahmad, Norlia. 2012. "Utilitarian and Hedonic Values of Mobile Services: A Preliminary Analysis from the Users' Perspective." *Business & Accounting Review*. http://www.kwansei-ac.jp/iba/results/pdf/BandA_review_vol9_p69-83.pdf.

Babin, Barry J., William R. Darden, and Mitch Griffin. 1994. "Utilitarian Shopping Value." *Journal of Consumer Research*

20 (4): 644–57. https://doi.org/DOI: http://dx.doi.org/10.1086/209376.

Cetină, Iuliana, Maria-Cristiana Munthiu, and Violeta Rădulescu. 2012. "Psychological and Social Factors That Influence Online Consumer Behavior." *Procedia - Social and Behavioral Sciences* 62: 184–88. https://doi.org/10.1016/j.sbspro.2012.09.029.

Chang, Chi Cheng, Chaoyun Liang, Chi Fang Yan, and Ju Shih Tseng. 2013. "The Impact of College Students' Intrinsic and Extrinsic Motivation on Continuance Intention to Use English Mobile Learning Systems." *Asia-Pacific Education Researcher* 22 (2): 181–92. https://doi.org/10.1007/s40299-012-0011-7.

Chen, Wen Kuo, Dong-Shang Chang, and Chun-Chen Chen. 2017. "The Role of Utilitarian and Hedonic Values on Users' Continued Usage Intention in a Mobile Hotel Booking Environment." *Journal of Economics and Management* 13193–220 (2): 106–15.

Cheung, Christy M.K., Gloria W.W. Chan, and Moez Limayem. 2005. "A Critical Review of Online Consumer Behavior: Empirical Research." *Journal of Electronic Commerce in Organizations* 3 (4): 1–19. https://doi.org/10.4018/jeco.2005100101.

Chitturi, Ravindra, Rajagopal Raghunathan, and Vijay Mahajan. 2007. "Form versus Function: How the Intensities of Specific Emotions Evoked in Functional versus Hedonic Trade-Offs Mediate Product Preferences." *Journal of Marketing Research* 44 (4): 702–14. https://doi.org/10.1509/jmkr.44.4.702.

Chitturi, Ravindra, Rajagopal Raghunathan, Vijay Mahajan, and Ravi Chitturi. 2008. "DELIGHT BY DESIGN: The Role of Hedonic Versus Utilitarian Benefits The First Author Acknowledges the Support of the Laura." *Journal of Marketing Article Postprint* 72 (3): 48–63. https://pdfs.semanticscholar.org/d946/94d47e7eeb8bc850f9d48f7f5a3fbd3efc0f.pdf.

Chowdhary, Nimit, and Monika Prakash. 2001. "Service Quality: Revisiting The Two Factors Theory." *The First Internationa l Conference on Electronic Business, Hong Kong, December 19-21*, 1–8.

Constantiou, Ioanna D. 2009. "Consumer Behaviour in the Mobile Telecommunications' Market: The Individual's Adoption Decision of Innovative Services." *Telematics and Informatics* 26 (3): 270–81. https://doi.org/10.1016/j.tele.2008.11.005.

Cuevas, Antonio, Jose Ignado Moreno, Pablo Vidales, and Hans Einsiedler. 2006. "The IMS Service Platform: A Solution for next-Generation Network Operators to Be More than Bit Pipes." *IEEE Communications Magazine*, 2006. https://doi.org/10.1109/MCOM.2006.1678113.

Dirjen SDPPI Kementrian Komunikasi dan Telematika. 2018. *Analisa Industri Telekomunikasi Indonesia Untuk Mendukung Efisiensi*.

Dishaw, Mark T, and Diane M Strong. 1998. "TTF and TAM Models" 36: 9–21. http://citeseerx.ist.psu.edu/viewdoc/download?doi=10.1.1.460.5961&rep=rep1&type=pdf.

Ferdinand, A. 2002. Structural Equation Modelling dalam Penelitian Manajemen. Semarang. FE Undip.

Fernández, Zulima, and Belén Usero. 2009. "Competitive Behavior in the European Mobile Telecommunications Industry: Pioneers vs. Followers." *Telecommunications Policy* 33 (7): 339–47. https://doi.org/10.1016/j.telpol.2009.03.004.

Gebauer, Judith, Michael J Shaw, Michele L Gribbins, Judith Gebauer, Michael J Shaw, and Michele L Gribbins. 2005. "Towards a Specific Theory of Task − Technology Fit for Mobile Information Systems." *Journal of Strategic Information System*, 1–52.

Gerpott, Torsten J., Sandra Thomas, and Michael Weichert. 2013. "Characteristics and Mobile Internet Use Intensity of Consumers with Different Types of Advanced Handsets: An Exploratory Empirical Study of IPhone, Android and Other Web-Enabled Mobile Users in Germany." *Telecommunications Policy* 37 (4–5): 357–71. https://doi.org/10.1016/j.telpol.2012.04.009.

Ghezzi, Antonio, Marcelo Nogueira Cortimiglia, and Alejandro Germán Frank. 2015. "Strategy and Business Model Design in Dynamic Telecommunications Industries: A Study on Italian Mobile Network Operators." *Technological Forecasting and Social Change* 90 (PA): 346–54. https://doi.org/10.1016/j.techfore.2014.09.006.

Goodhue, Dale L, and Ronald L Thompson. 1995. "Task-Technology Fit and Individual Performance." *MIS Quarterly: Management Information Systems* 10 (3): 278–88. https://doi.org/10.1093/bib/bbp020.

Hair, J.F., Anderson, R.F., Black, W.C. 2007. *Multivariate Data Analysis: A Global Perspective*. Seventh Edition, Prentice Hall. New Jersey, USA.

Higgins, Susan H, William L Shanklin, Susan H Higgins, and William L Shanklin. 1992. "SEEKING MASS MARKET ACCEPTANCE FOR HIGH-TECHNOLOGY CONSUMER PRODUCTS." *Journal of Consumer Marketing* 9 (1): 4–15.

Holbrook, Moris B, and Elizabethh C Hirschman. 1982. "The Experiental Aspects of Consumption: Consumer Fantasies, Feelings and Fun." *The Journal of Consumer Research* 9 (2, Sept 1982): 132–40.

Hootsuite We're Social. 2020. "DIGITAL 2020."

Ju, Su Yi. 2011. "Telecom Upgraded Services Adoption Model Using the Use - Diffusion Theory: The Study of China'S Telecommunications Market." *International Journal of Organizational Innovation* 4 (2): 77–122.

Keelson, Solomon A. 2012. "Factors Affecting Consumer Choice of Multiple Mobile Services." *Global Journal of Business Research (GJBR)* 6 (4): 59–67. http://search.ebscohost.com/login.aspx?direct=true&db=bsh&AN=82211186&site=ehost-live.

Kleijnen, Mirella, Ko de Ruyter, and Martin Wetzels. 2007. "An Assessment of Value Creation in Mobile Service Delivery and the Moderating Role of Time Consciousness." *Journal of Retailing* 83 (1): 33–46. https://doi.org/10.1016/j.jretai.2006.10.004.

Kotler, P. dan K. L. Keller.. (2012). Marketing Management, 14th edition, Pearson Prentice Hall, New Jersey.

Kwai Fun IP, Rachael, and Christian Wagner. 2008. "Weblogging: A Study of Social Computing and Its Impact on Organizations." *Decision Support Systems* 45 (2): 242–50. https://doi.org/10.1016/j.dss.2007.02.004.

Lee, Matthew K O, Christy M K Cheung, and Zhaohui Chen. 2007. "Understanding User Acceptance of Multimedia Messaging Services : An Empirical Study." *Wiley InterScience* 58 (13): 2066–77. https://doi.org/10.1002/asi.

Likert, Rensis. 1932. "'Technique for the Measurement of Attitudes, A.'" *Archieves of Psychology* 22: 1952–33. https://doi.org/10.4135/9781412961288.n454.

Lin, Kuan-Yu, and Hsi-Peng Lu. 2015. "Predicting Mobile Social Network Acceptance Based on Mobale Value and Social Value." *Emerarld Research* 25 (1): 107–30. https://doi.org/10.1016/j.topol.2010.07.026.

Lin, Kuan Yu. 2016. "User Communication Behavior in Mobile Communication Software." *Online Information Review* 40 (7): 1071–89. https://doi.org/10.1108/OIR-07-2015-0245.

Liu, Chung Tzer, Yi Maggie Guo, and Chia Hui Lee. 2011. "The Effects of Relationship Quality and Switching Barriers on Customer Loyalty." *International Journal of Information Management* 31 (1): 71–79. https://doi.org/10.1016/j.ijinfomgt.2010.05.008.

Malhotra, Naresh, K. 2010. Markting research: An Applied Orientation Sixth Edition. Pearson Education.

Malhotra, Arvind, and Claudia Kubowicz Malhotra. 2013. "Exploring Switching Behavior of US Mobile Service Customers." *Journal of Services Marketing* 27 (1): 13–24. https://doi.org/10.1108/08876041311296347.

Mazzoni, Clelia, Laura Castaldi, and Felice Addeo. 2007. "Consumer Behavior in the Italian Mobile Telecommunication Market." *Telecommunications Policy* 31 (10–11): 632–47. https://doi.org/10.1016/j.telpol.2007.07.009.

Ministry of Communication and Informatics. 2018. "Survey Penggunaan Teknologi Informasi Dan Komunikasi."

Negahban, Arash, and Chih-hung Chung. 2014. "Computers in Human Behavior Discovering Determinants of Users Perception of Mobile Device Functionality Fit." *Computers in Human Behavior* 35: 75–84. https://doi.org/10.1016/j.chb.2014.02.020.

Nguyen, Thuan, Ferit Yegenoglu, Agatino Sciuto, and Ravi Subbarayan. 2001. "Voice over IP Service and Performance in Satellite Networks." *IEEE Communications Magazine* 39 (3): 164–71. https://doi.org/10.1109/35.910604.

Okada, Erica Mina. 2005. "Justification on Consumer Justification Effects Choice of Hedonic and Utilitarian Goods." *Journal of Marketing Research* 42 (1): 43–53.

Rogers, E. M., 1995. *Diffusion of Innovations*. Fourth edition. The Free Press, New York.

Reuver, Mark De, Guido Ongena, and Harry Bouwman. 2013. "Should Mobile Internet Be an Extension to the Fixed Web? Fixed-Mobile Reinforcement as Mediator between Context of Use and Future Use." *Telematics and Informatics* 30 (2): 111–20. https://doi.org/10.1016/j.tele.2012.02.002.

Schiffman, L. G., Wisenblit, J. L. 2013. *Consumer Behavior*. 11th Ed. Pearson Education Limited. Harlow. Essex. England.

Shaw, Heather, David A. Ellis, and Fenja V. Ziegler. 2018. "The Technology Integration Model (TIM). Predicting the Continued Use of Technology." *Computers in Human Behavior* 83: 204–14. https://doi.org/10.1016/j.chb.2018.02.001.

Shin, Dong Hee. 2012. "Cross-Analysis of Usability and Aesthetic in Smart Devices: What Influences Users' Preferences?" *Cross Cultural Management* 19 (4): 563–87. https://doi.org/10.1108/13527601211270020.

Shin, Dong Hee, and Yong Jin Park. 2017. "Understanding the Internet of Things Ecosystem: Multi-Level Analysis of Users, Society, and Ecology." *Digital Policy, Regulation and Governance* 19 (1): 77–100. https://doi.org/10.1108/DPRG-07-2016-0035.

Sujata, Joshi, Sarkar Sohag, Dewan Tanu, Dharmani Chintan, Purohit Shubam, and Gandhi Sumit. 2015. "Impact of Over the Top (OTT) Services on Telecom.Pdf." *Indian Journal of Science and Technology* 8 (S4): 145–60.

Venkatesh, Visvanath, and Fred D Davis. 2000. "A Theoretical Extension of the Technology Acceptance Model : Four Longitudinal A Theoretical Extension of the Technology Acceptance Model : Four Longitudinal Field Studies." *Institute for Operations Research and the Management Science* 46 (2): 186–204.

https://doi.org/10.1287/mnsc.46.2.186.11926.

Vijay, P, and V Krishnaveni. 2016. "Customer Preference Towards The Mobile Network Service Provider - a Study with The Special Reference to Coimbatore City." *International Journal of Management Research and Review* 6 (10/4): 1386–92.

Wareham, Jonathan, Armando Levy, and Wei Shi. 2004. "Wireless Diffusion and Mobile Computing: Implications for the Digital Divide." *Telecommunications Policy* 28 (5–6): 439–57. https://doi.org/10.1016/j.telpol.2003.11.005.

West, Joel, and Michael Mace. 2010. "Browsing as the Killer App: Explaining the Rapid Success of Apple's IPhone." *Telecommunications Policy* 34 (5–6): 270–86. https://doi.org/10.1016/j.telpol.2009.12.002.

Yen, David C, Chin-shan Wu, Fei-fei Cheng, and Yu-wen Huang. 2010. "Computers in Human Behavior Determinants of Users ' Intention to Adopt Wireless Technology : An Empirical Study by Integrating TTF with TAM." *Computers in Human Behavior* 26 (5): 906–15. https://doi.org/10.1016/j.chb.2010.02.005.

Biography

Widya Granita is a doctoral student at Mercu Buana University, Jakarta. Bachelor's degree from Padjadjaran University, majoring in Soil and Water Engineering, and a master's degree from Telkom University with majoring in marketing management. Widya work as a specialist in Reengineering Technology Directorate, Digital Business Tansformation for the Telco industry, and Regulatory Management at a mobile network operator for 25 years and also as a lecturer of International University Liason Indonesia in Jakarta for five years, guest lecturer in the University of Indonesia, Swiss German University and Telkom University. Her research interests include consumer behavior, mobile-data services, adoption diffusion, use diffusion, and Telco business and technology transformation.