Design of a Novel Micro-Tube Circulating Fluidized Bed MTCFB

Emad A.M. Abdelghani[a, b, *]
[a]Department of Chemical Engineering Technology, Yanbu Industrial College, Royal Commission Yanbu Colleges & Institutes, P.O. Box 30346, Yanbu Industrial City 41912, Kingdom of Saudi Arabia
[b]Minia University, Faculty of Engineering, Chemical Eng. Dept., Minia, P.O. Box 61519, Egypt
mahmoude@rcyci.edu.sa, omaremad@yahoo.com

Abstract
Highly exothermic catalytic reactions face the situation, where very large heat transfer rates at high temperatures are required for safe operation. This high temperature requires an efficient heat exchange and highly sophisticated control systems for temperature, pressure and flow. Catalyst deformation, softening and sintering is expected. Normal and circulated fluidized beds cannot provide the required large areas. This study suggests a unique design of a micro-tube circulating fluidized bed reactor, MTCFB, where the riser column consists of a bottom double pipe and an upper shell and tube heat exchangers. The tube bundle consists of small micro-size tubes of 6.0 mm I.D. This design provides large mass and heat transfer rates with perfect mixing. A cold-model experiments were carried out to examine the performance of the MTCFB. Small pressure drop, less than 2.0 % of the atmospheric pressure, across the grid and the top riser in absence and in presence of bed particles, was noticed at high gas velocities as 8.0 m/s. Gas-solid flow for MTFB excluding cyclone and downer, and MTCFB, was examined, in terms of elutriation and circulation rates, respectively. Fluidization run smoothly with high reproducibility for bed particles up to 2.5 kg, irrespective of the mode of operation.

Keywords: Circulating fluidized bed, Micro-tube, heat exchanger riser, pressure drop; gas-solid flow

1. Introduction:
Applications of fluidized bed reactors, FBRs, are broadly found in chemical process industries such as gas-solid reactions and solid catalyzed reaction in gas phase (Zhang, 2020; Pandey et al., 2018). In recent years, the circulating fluidized bed reactors, CFBRs, have also been used for liquid-solid systems and gas-liquid-solid (three phase) systems (Pandey et al., 2015). However, the predominant interest in circulating fluidized bed, CFB systems continuous to be for the gas-solid (two phase) systems as CFBs have high gas throughputs, limited back mixing of gas, long and controllable residence time of particles, temperature uniformity, without "hot spots", flexibility in handling particles of widely differing sizes, densities, and shapes, effective contacting between gas and particles, lack of bypassing of gas with minimal mass transfer limitations, and opportunity for separate and complementary operation (e.g., catalyst regeneration or particle cooling) in the return loop (Grace and Lim, 2013). Besides, fluidized beds, specifically CFBs, are widely because of their liquid like behavior, easy to control and automate, rapid mixing, uniform temperature and concentrations, resistance to rapid temperature changes, hence CFBs respond slowly to changes in operating conditions and avoids temperature runaway with exothermic reactions, circulation of solids between integrated parts of fluidized beds for heat exchange, applicability for large or small scale operation, and high heat and mass transfer rates requiring smaller surfaces (Kayode, 207). Processes such as polymerization reactions and synthesis of polypropylene generates excessive amount of heat. The intense mixing associated with fluidization prevents hot spots where the particles would melt (Asua, 2008). Currently, most of the processes that are being developed for the industrial production of carbon nano-tubes use FBs. Several potential applications of fluidization technology are chemical looping combustion (Gyllén, 2019), which has not yet been commercialized. Many other applications in chemical process technology face the situation where very large heat transfer exchange rates are required with high performance and safe operation (Khawaja, 2008). Highly exothermic catalytic reaction such as oxidative coupling of methane, as an example, is carried out as temperature as high as 800 ^{0}C (Galadima and Muraza, 2016; Albrecht, 2018; Lunsford, 1995; Khan, 2016).

There is a deep need to design a catalytic system flexible enough to carry out a highly exothermic reaction and capable of efficient withdrawal of large heat released from such reactions to avoid deformation and sintering of the catalyst inside. Due to difficulty in controlling the temperature which in turn lead to pressure increase in the system, extra care with regard to efficient heat exchange system and control system are needed.

Traditionally, catalyzed reactor like fixed beds and moving bed contactors are not suitable and practically unsafe to carry out such reactions. Even the normal and CFB still cannot provide large heat transfer areas for absorbing the heat released from exothermic reaction. The accumulated heat in all of the above mentioned reactors will lead to catalyst

deformation, softening and finally sintering which turn creates a very large pressure drop inside these rectors (Kiani, 2019). This is very risky situation and completely unsafe. CFBs are first candidate as the mixing inside is maximum. But the heat transfer area in classical CFBs is not so high. That is why the idea of the design suggested in this study was originated.

The current study aims at modifying the design of the CFBs by maximizing the heat transfer areas. The riser column will be divided into two parts: the bottom part of the riser column is a double pipe heat exchanger and the upper is a shell and tube heat exchanger. The current study proposes a new design for investigation of the fluidization behavior in narrow tubes of few millimeters inside diameter in the upper shell and tube part of the riser. Besides, the lower double-pipe heat exchanger provides large volumes suitable for expansion resulting from initiating the reactions in the bottom part of the riser. This design is believed to present a unique type of CFB reactor system capable of carrying out highly exothermic catalytic reactions with perfect mixing, if suitable catalyst size is selected.
Larger number of tube per shell results in larger area for heat exchanger and larger heat transfer load. However, larger wall effects, larger pressure drop, larger electrostatics, larger attrition rates and smaller inventory fluidized particle loadings are expected to form a serious operating problems need to be optimized.

2. Experimental: unit description and materials

2.1. Unit description:

The current design, as shown in **Figure 1**, utilizes a riser consisting of two heat exchangers instead of the classical one tube riser, usually including one-tube assembly. This riser arrangement will result in a high heat transfer area sufficient for exchanging heat loads liberating and releasing from highly exothermic reactions like combustion reactions or oxidative coupling of methane as an example. The two heat exchangers assembly of the riser column has a total height of 1.8 m, each heat exchanger has height of 0.9 m. A double pipe heat exchanger (8), 200 mm I.D., located at the bottom just above the gas distributor (the grid) is attached to another upper shell and tube heat exchanger (9) of four different tube bundles of variable tube diameters. **Table 1** summarizes the four different tube bundles used in this study including tube diameters of 25 mm I.D. down to 6 mm I.D. micro tube size. This arrangement is believed to perform perfectly as a riser and as a heat exchanger at the same time.

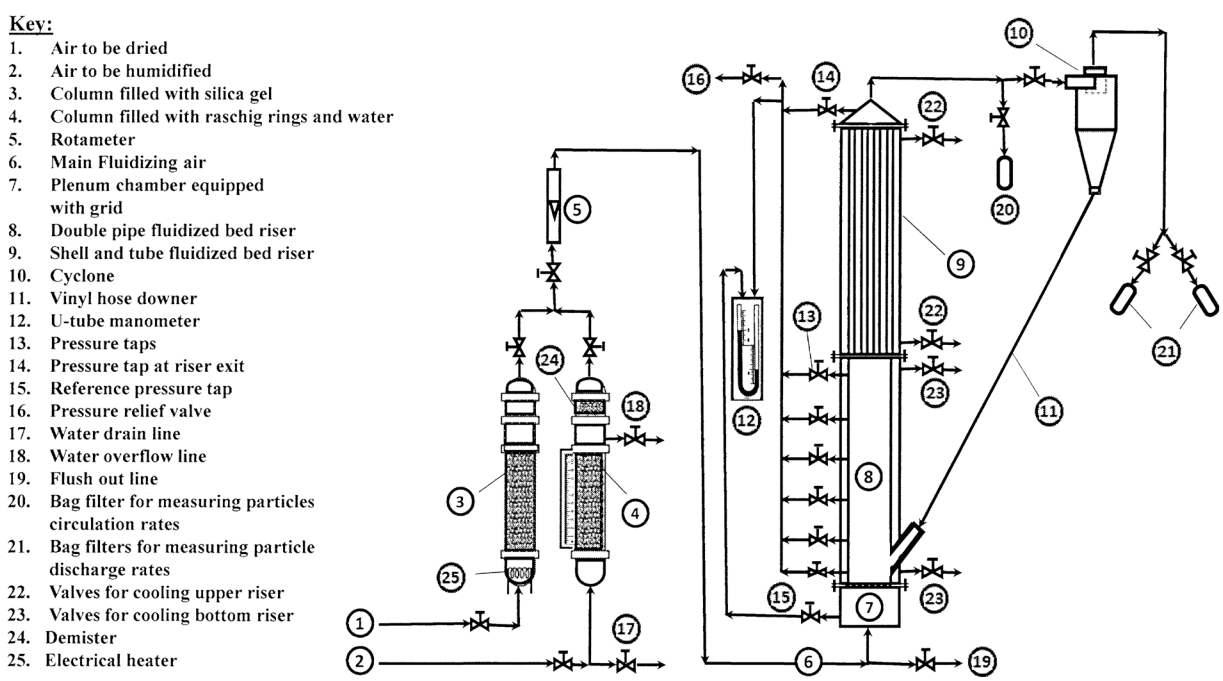

Figure 1. Experimental setup for micro-tube circulating fluidized bed (MTCFB)

Table 1. Specifications of tube bundles of the shell and tube riser part

Bundle type	I	II	III	IV
Tube diameter, dt [mm]	25	12.5	10	6 mm
Tube number, $t_{no.}$	4	12	24	69

The two heat exchangers assembly of the riser column, the cyclone, pipelines, elbows and joints are made of high grade stainless steel [C45] due to its excellent mechanical and physical properties as shown in **Table 2**.

Table 2. Mechanical and physical properties of carbon steel C_{45}

Quantity	Value	Unit
Young's modulus	210000 - 210000	MPa
Tensile strength	600 - 800	MPa
Elongation	16 - 16	%
Yield strength	340 - 400	MPa
Thermal expansion	11.7 - 11.7	e^{-6}/K
Thermal conductivity	46 - 46	W/m.K
Specific heat	500 - 500	J/kg.K
Melting temperature	1540 - 1540	°C
Density	7850 - 7850	kg/m^3
Resistivity	0.2 - 0.2	Ohm.mm^2/m
Electrochemical potential	-0.45 - -0.45	V

Thermal insulation plays a very important role in reducing the heat losses from hot surfaces. Thermal conductivity k (unit $W \cdot m^{-1} \cdot K^{-1}$), denotes the ability of a material to conduct heat and it indicates the amount of steady state heat flow through a unit area of homogeneous material as induced by a unit temperature gradient in a perpendicular direction to that unit area. Thermal Resistance, R, is temperature difference at steady state between two defined surfaces of a material or construction that induces a unit heat flow rate through a unit area. Thus, a material that has a low thermal conductivity (k) has a high insulating capability (R-value). AFICO Pre-Engineered FIBREFRAX DURABLANKET S, is a premium-grade insulator that is manufactured from spun ceramic fibers that are exceptionally strong and, as such, form very strong blankets. The strength of the ceramic fibers ensure that this blanket is very tough and can, therefore, be used in challenging environments at temperatures up to 1000 ^{0}C. This insulator is used for insulating the two upper and lower parts of the riser column, the cyclone, pipelines, elbows and other joints, in the present study. K and R values of this insulator are shown in **Table 3**.

Table 3. K and R values of FIBREFRAX DURABLANKET S

At 600 °C mean Temperature	Thickness	K-Value ($W \cdot m^{-1} \cdot K^{-1}$)	R-Value($m^2.K.W^{-1}$)
	25 mm	0.12	0.208

The design under consideration will, shown in **Figure 1**, be presented here as a cold model and performance will be investigated to prepare the system for any future application as a hot model experimental apparatus.
Air is used as a fluidizing gas and several solid particles are used as fluidized particles. Sand is used as coarse particles and fine catalytic cracking (FCC) particles is used as fine and also as coarse particles.
The air (1) and (2) is proportioned into two columns, one filled with silica gel (3) and the other with Raschig rings and water (4). A demister (24) at the top of this column removes any mist droplets escaping with air. The purpose of this arrangement is to adjustment humidity of the air. The air is divided into two lines, one for adjusting the humidity and pre-humidification of bag filters (16) and the other as a basic fluidizing gas (6). The air volumetric flow rate was measured by a rotameter (5) that made by Key Instruments (Ki) and has range between 100-1400 LPM.
A very simple U-tube manometer (12) is designed to measure the pressure variation across the whole length of the riser column and plenum chamber. Six tabs (13) are distributed across the inner tube of the lower double pipe heat exchanger riser (8), where each two tabs are 15 cm apart. An additional pressure tab (14) tab is located in the riser exit just above the tubes of upper shell and tube heat exchanger riser (9). One reference pressure tap is connected to the plenum chamber. The reference point is attached to one end of U-tube manometer which is filled with manometer fluid of 1.12 sp.gr., the other seven tabs are connected to other end of U-tube manometer. A relief pressure tap (16) connected to the U-tube pressure measuring arrangement to vent trapped air and calibrate the U-tube manometer from time to time. The arrangement of the tabs can be use as open end to measure the pressure directly. Besides, it can be

used as differential manometer to measure a pressure differences between a reference point and other 7 point across the riser column assembly.

A cyclone (10) is attached to the top of the riser column to collect the elutriated particles. A flexible vinyl hose downer (11) is connected at the bottom of the cyclone to recycle the particles to the lower double tube heat exchanger riser. Fine powders escaped from the upside stream of the cyclone were collected by pre-weighted and pre-humidified bag filters (21). Another bag filter (20), connected at a point between the riser exit and the cyclone inlet, is used for measuring the total flux or the elutriated particles which gives an indication for the circulation behavior of the particles inside the system.

2.2. Particle composition:

In this study, silica flour particles of 150~250 micron mean size, 0.1 % water content and 2.66 sp.gr., is used as a bed particle. Composition of silica flour is shown in **Table 4**.

Table 4. Composition of silica flour

Components	SiO_2	Al_2O_3	Fe_2O_3	TiO_2	K_2O	CaO	MnO	MgO	Na_2O
Composition, %	99.8	0.0	0.241	0.3630	0.0348	0.1688	0.0101	0.298	0.011

2. Detailed design of MTCFB

2.1. Gas Distributor (Grid):

The gas distributor, the grid, in a fluidized bed is intended to induce a uniform and stable fluidization across the entire bed cross-section, operate for long periods (years) without plugging or breaking, minimize weepage of solids into the plenum beneath the grid, minimize attrition of the bed material, and support the weight of the bed material during start-up and shut-down. In practice, grids have taken a variety of forms. Whatever the physical form, all are fundamentally classifiable in terms of the direction of gas entry: either upwardly, laterally, or downwardly. The choice depends on prevailing process conditions, mechanical feasibility, and cost. In the past, grid design has been more of an art than a science. However, more recent studies now allow grid designs based on scientific principles (Paiva and Pinho, 2009; Sobrino et al., 2009; Paiva et al., 2009).

For a grid, achieving equal distribution of gas flow through many parallel paths requires equal resistances and sufficient resistance to equal or exceed the maximum value of any unsteady-state pressure fluctuation. It has been determined experimentally that the "head" of solids in some fluidized beds above an upwardly-directed grid port can vary momentarily by as much as 30%. This is due to large fluctuations in the jet penetration for an upwardly-directed jet as discussed in the previous section. The equivalent variation downstream of a downwardly-directed port is less than 10%. Thus, as a rule of thumb, the criteria for good gas distribution based on the direction of gas entry are (Yang, 1998):

(a) For upwardly and laterally-directed flow: $\Delta P\, grid \geq 0.3\, \Delta P\, bed$ …….…...…. (1)

(b) For downwardly-directed flow: $\Delta P\, grid \geq 0.1\, \Delta P\, bed$ ……..... (2)

(c) Under no circumstances should the pressure drop across a large-scale commercial grid be less than 25 cm of water, i.e. $\Delta P\, grid \geq 25\ cm\ H2O$, ……..……..…… ……..…….. (3)

Several investigators (Hiby, 1964; Zuiderweg and Design, 1967; Whitehead, 1971; Siegel, 1976; Mori and Moriyama, 1978) have found the ratio of pressure drops to be in the range of 0.015 to 0.4.

A perforated-type grid was selected for the current study as it is the simplest design. Besides, the pressure drop across the perforated grid type is always within acceptable limits. Moreover, maintenance or even replacement is an easy task for an economic fluidized bed operation. The current grid is made by 7 sheets, where, each sheet has an aperture size of 100 μm. The sheets are placed together randomly to make the grid. Thus, this design results in a feed into the rise in form of very fine air bubbles. Mechanically, seven sheets give a mechanically strong support for the bed before start-up of the process.

3. Design and specifications

3.1. Design details of the two heat exchanger riser assembly

Double pipe fluidized bed design is straightforward. It uses one pipe inside another. The inside diameter of the inner pipe of the is controlled by the required fluidized bed cross-sectional area which controls the operating velocity of the reactant gas and/or liquid. An important factor for the design of the double pipe fluidized bed is the type of flow pattern in the bed. The current's dimensions are; the height = 0.9 m, inside pipe diameter = 0.2 m and inside another pipe diameter = 0.25 m. The superficial gas velocity is inversely proportional to diameter of the inner tube. This velocity is, in turn, affecting the net rising velocity of the fluidized particles in the bed.

The current design of upper riser is one pass shell & tubes heat exchanger and it follows the standard design methods (Richardson, 2005). The current experimental setup uses the tube bundle of 69 tube arrangement, which gives very high heat transfer area comparing to lower part. Pressure drop across the upper shell and tube riser is highly expected due to the high area contraction. However, this tube bundle was selected to investigate the most difficult operating conditions. Tubes` side counts are very clear, since tubes side stream speaks to a basic instance of move through a round conductor. Heat-exchange coefficient and weight drop both change with tube side speed, the last all the more unequivocally so. A decent plan will make the best utilization of the permissible weight drop, as this will yield the most elevated heat-transfer exchange coefficient. In the event that all the tubes side liquid, where to move through all the tubes (one tube pass), it would prompt a specific speed.

There are four tube layout patterns. They are the triangular (30°), the rotated triangular (60°), the square (90°), and the rotated square (45°) patterns. A triangular (or rotated triangular) example will suit more tubes than a square (or rotated square) design. Moreover, a triangular example delivers high turbulence and in this way a high heat-transfer exchange coefficient. Be that as it may, at the ordinary tube pitch of 1.25 times the tube O.D., it doesn't allow mechanical cleaning of tubes, since access paths are not accessible. Therefore, a triangular format is restricted to clean shell side administrations. For administrations that require mechanical cleaning on the shell side, square examples must be utilized. Substance cleaning does not require access paths, so a triangular design might be utilized for filthy shell side administrations gave compound cleaning is reasonable and compelling. A turned triangular example from time to time offers any points of interest over a triangular example, and its utilization is subsequently not exceptionally well known. For dirty shell side administrations, a square design is normally utilized. Be that as it may, since this is an in-line design, it produces lower turbulence. In this manner, when the shell side Reynolds number is low (< 2,000), it is generally profitable to utilize a pivoted square example since this produces much higher turbulence, which results in a higher productivity of transformation of weight drop to heat-transfer exchange. The current design of tubes is square type of pitch arrangement for easier mechanical cleaning of the shell side.

The column diameter is very important because it effects on the gas velocity inside the column. If the column diameter is large, the gas velocity will be small. However, if the column diameter is small, the gas velocity will be high at same gas flow rate. In turn, the gas velocity is closely related to terminal falling velocity. Both of terminal velocity, U_t and superficial gas velocity, U_g effect on the net rising velocity = U_g - U_t. The net rising velocity value must be positive to force the particles to fluidize. The upper part tube diameter is chosen to have 6 mm inside diameter to allow investigation of the fluidization inside a narrow tube. For the net rising velocity, it is sure if the particle can move upwardly in the lower part, it must move faster in the upper tubes as the cross-sectional area is much smaller. Calculation of cross-sectional areas, $\boldsymbol{A_L = 20.87\, A_U}$. The relationship between two velocities' values is inversely proportional to their areas. From the continuity equation: thus, $U_U \simeq 21\, U_L$, where Superficial gas velocity, U_L, through lower or upper section can be calculated as:

$$U_L = \frac{Q\ \ (m^3/min)}{\boldsymbol{A_L}\ (m^2)} \quad \text{.....(4)}$$

The influence of the superficial gas velocity is quite obvious. Both the ejection of particles from the dense bed into the freeboard and the transport through the freeboard are affected by the superficial velocity. In general, the elutriation rate increases proportionally with the gas velocity to a power of 2 to 4. Furthermore, the turbulent fluidization occurs when, as U_g is increased, a point is reached where the bubbles or slugs, begin to break down instead of continuing to grow. The "critical velocity," U_c, which demarcates the onset of the turbulent fluidization flow regime, is usually determined experimentally as the superficial gas velocity at which the standard deviation of pressure fluctuations reaches a maximum. If U_g increases beyond a velocity known as the transport velocity U_{tr}, a fast fluidization regime is reached. In the fast fluidization regime, solid particles are thrown outside of the bed, which makes the bed surface undistinguishable. Finally, the pneumatic conveying regime is reached when the superficial gas velocity is much higher than the transport velocity; this regime is characterized by the particle being transported out of the bed in a dilute phase. Circulating fluidized beds, CFBs, operates within this velocity range. **Table 5** summarizes the design specification and dimensions of the riser assembly including the heat transfer areas of the two heat exchangers.

Table 5. Dimention of the current bottom and upper riser setup

Bottom double-pipe riser	Upper shell and tube riser
L = 0.9 m D_{out} = 0.25 m D_{in} = 0.2 m, thickness, Δx= 0.2 mm	One pipe dimension L = 0.9 m D_{in} = 6.0 mm, n = 69 tubes, Δx= 0.1 mm
Calculation of the Cross-sectional area	

$A_L = \frac{\pi \times 0.2^2}{4} = 0.0314\ m^2$	$A_U = \frac{\pi \times 0.006^2}{4} \times n = 0.00195\ m^2$
$\boldsymbol{A_L = 20.87\ A_U}$, Cross-sectional area of the lower part is almost **21** times that of the upper part. This ratio is used for calibration curves for the superficial gas velocities in the lower and upper parts of the riser column. The velocity (U) increases with increasing the volumetric feed rate (Q) of the gas and at a certain gas flow, the gas velocity in the upper part (U_L) is 20.87 times larger than the velocity in the lower part (U_L) due to the difference in cross sectional area between the two parts.	
Calculation of the lateral heat transfer area	
Lateral Area, A = $\pi\ D_{mean}\ L\ m^2$	
$D_{mean} = \frac{D\ in + (D\ in + \Delta x)}{2} = 0.203$ m $A_{L-HT} = \pi \times 0.203 \times .9 = 0.57\ m^2$	$D_{mean} = \frac{D\ in + (D\ in + \Delta x)}{2} = 0.00601$ m $A_{U-HT} = \pi \times 0.0101 \times 0.9 \times 24 = 1.172\ m^2$
So, $A_{U-HT} \simeq 2.0\ A_{L-HT}$, Thus the overall heat transfer area of the upper shell and tube part is almost **2** times that of the lower part	

3.2. Design of riser exit:

The sort and design of the way out utilized at the highest point of a CFB can have a huge effect upon the suspension flow of CFBs. This paper is intended to minimize these impacts. The Various riser exit geometries (Sharifan, 2011) are shown in **Figure 2**. The current design of riser exit, shown in **Figure 3**, combines the round-elbow and tapered axial exit to avoid sudden contraction. It allows the particles to pass out of the system in high velocity with minimum suspension flow.

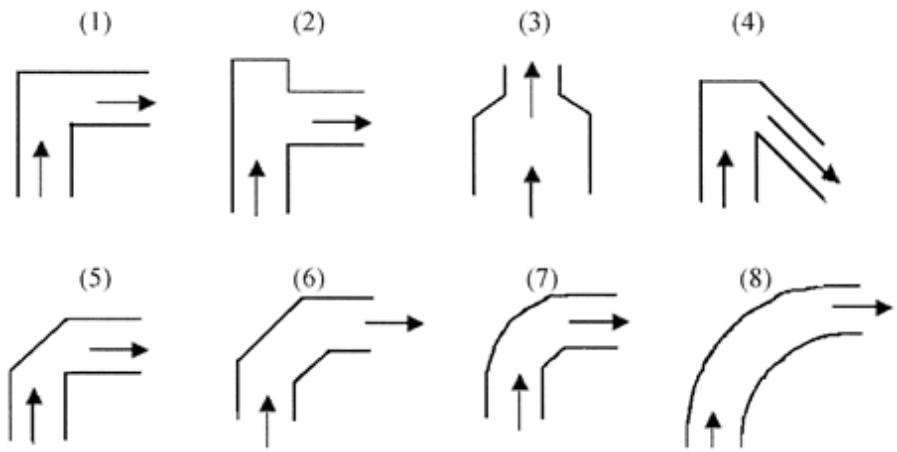

(1) L-elbow, 92) T-elbow, (3) tapered axial exit, (4) sharp 135° elbow, (5) shaved 45° elbow, (6) extended 45° elbow, (7) round elbow and (8) smooth elbow

Figure 2. Various designs for the riser exit geometries

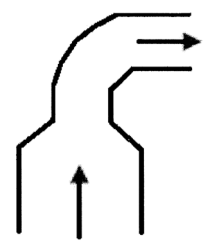

Figure 3. Selected design for the riser exit installed in the MTCFB

3.3. Design of the cyclone:

Cyclone separators provide a method of removing particulate matter from air streams at low cost and low maintenance. In general, a cyclone consists of an upper cylindrical part referred to as the barrel and a lower conical part referred to as cone. The air stream enters tangentially at the top of the barrel and travels downward into the cone forming an outer vortex. The increasing air velocity in the outer vortex results in a centrifugal force on the particles separating them from the air stream. When the air reaches the bottom of the cone, an inner vortex is created reversing direction and exiting out the top as clean air while the particulates fall into the dust collection chamber attached to the bottom of the cyclone.

The advantages of cyclone separator are the ability to operate at high temperatures, require relatively small space and it can handle liquid mists or dry materials.
The selection of cyclone depends on the collection efficiency which depends on the target and application, number of effective turns which controls the swirl behavior inside the cyclone, and the inlet velocity which controls the tangential, axial and radial velocities.

In the agricultural processing industry, 2D2D (Shepherd and Lapple, 1939) and 1D3D (Parnell and Davis, 1979) cyclone designs are the most commonly used abatement devices for particulate matter (PM) control. The D's in the

2D2D designation refer to the barrel diameter of the cyclone. The numbers preceding the D's relate to the length of the barrel and cone sections, respectively. A 2D2D cyclone has barrel and cone lengths of two times the barrel diameter, whereas the 1D3D cyclone has a barrel length equal to the barrel diameter and a cone length of three times the barrel diameter. Previous research (Wang, 2000) indicated that, compared to other cyclone designs, 1D3D and 2D2D are the most efficient cyclone collectors for fine dust (particle diameters less than 100 µm).

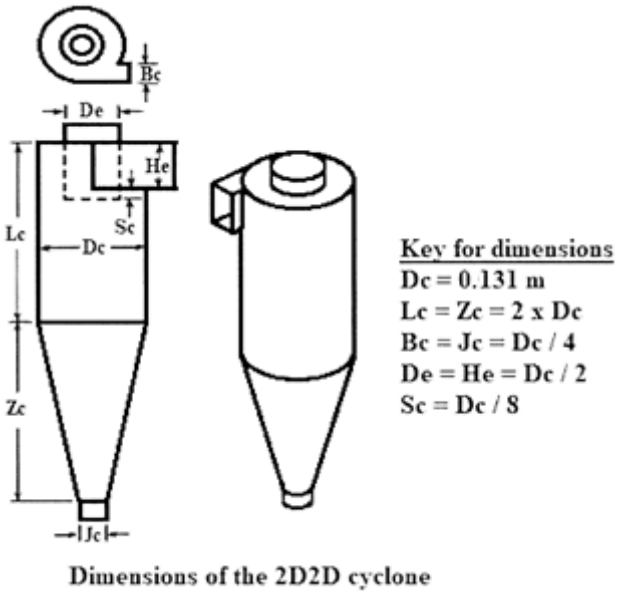

Figure 4. Complete design specification for the 2D2D cyclone installed in MTCFB

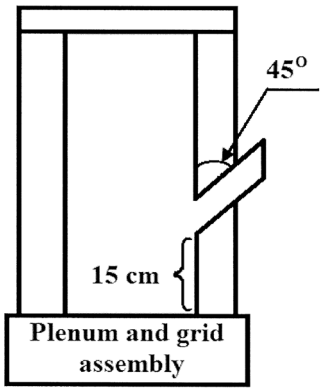

Figure 5. Selected design for the downer inlet installed in the MTCFB

A cycling lint was reported near the trash exit for the 1D3D and 2D2D cyclone designs when the PM in the inlet air stream contained lint fiber. It was reported that a significant increase in the exit PM concentration for these high efficiency cyclone designs and attributed this to small balls of lint fiber "cycling" near the trash exit causing the fine PM that would normally be collected to be diverted to the clean air exit stream (Mihalski et al., 1993). A new low-pressure cyclone, called the 1D2D cyclone, was introduced for the cotton ginning industry to solve the cycling-lint problem (Simpson and Parnell, 1995). The 1D2D cyclone is a better design for high-lint content trash compared with 1D3D and 2D2D cyclones (Wang et al., 1999).

As known, the main purpose of the cyclone separator is to control the collection of particles in the circulating fluidizing systems. This collection is usually favorable. However, in same case discharge and poor collection efficiency is needed for some specific applications. In the current study, we need to collect as much as possible of the coarse particle to return them to the main column (circulating). To select the suitable cyclone, a comparison between two different cyclone designs of the 2D2D type, in terms of their collection efficiency as shown in below Tables at different velocities. It was found that using cyclone with small diameter, a fraction of coarse particles escaped with air together with fine particles at high velocity with the cyclone upside stream. As result, with high velocity the outer vortex and inner vortex are merged and the interface is destroyed and, the function of cyclone separator is damaged. That is why another cyclone with larger diameter was used. **Figure 4** shows the current 2D2D cyclone design with 0.131 m diameter of barrel, D_c.

3.4. Design of the downer and Downer Inlet:

Downer is designed to make it easy for the particles to fed back into the system. The lower section of the downer, the connection pipe connected to the inner tube of the double pipe exchanger riser, is designed to allow the air bubbles to distribute the particles. This part of the downer, is designed to be inclined to the vertical by 45^0, as shown in **Figure 5**, to enhance the particles motion by gravitational acceleration back into the riser column at a point almost 15 cm above the grid. However, more inclination to the veridical is favorable.

The current downer inlet diameter is designed to allow some air bubble to prevent the particles to accumulation. The whole diameter is chosen not to be very small which results in packing of the particle at the feed point and not to large which results in large bubbling and back flow of air upwardly through the downer. In the current study the whole diameter was fixed at 1 in.

The downer design has attracted much consideration both the scholarly world and industry in the previous two decades. For its one of a kind elements portrayed by a uniform stream structure and an attachment stream conduct for gas and solid phases, downer finds gigantic potential for some reasonable applications including ultra-short contact forms, particularly with the intermediate(s) as the craved product(s), e.g., fluid catalytic cracking (FCC) process. Be that as it may, hypothetical comprehension on the unmistakable stream structures and particle clustering in downers has not been gone after lacking such endeavors in modeling and reproduction of multiphase streams in downers. Down-comer is designed with angle connect directly to the system. The current downer is made of a 1 in inside diameter flexible vinyl hose.

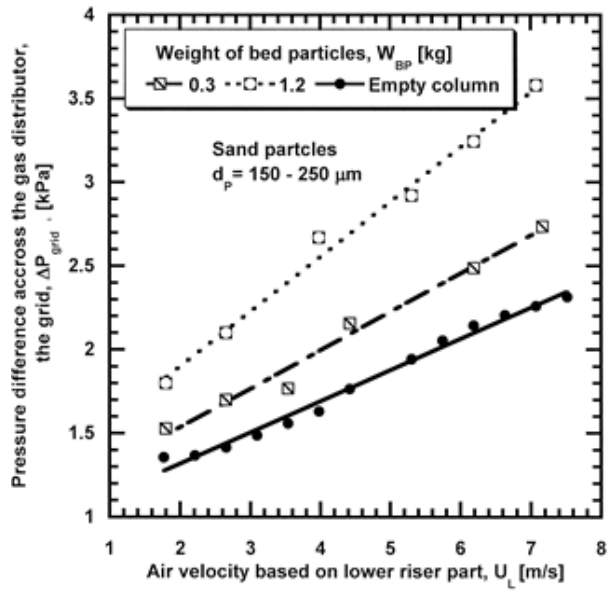

Figure 6. Variation of pressure drop across the gas distributor, the grid, with air velocity in absence and in presence of bed particles

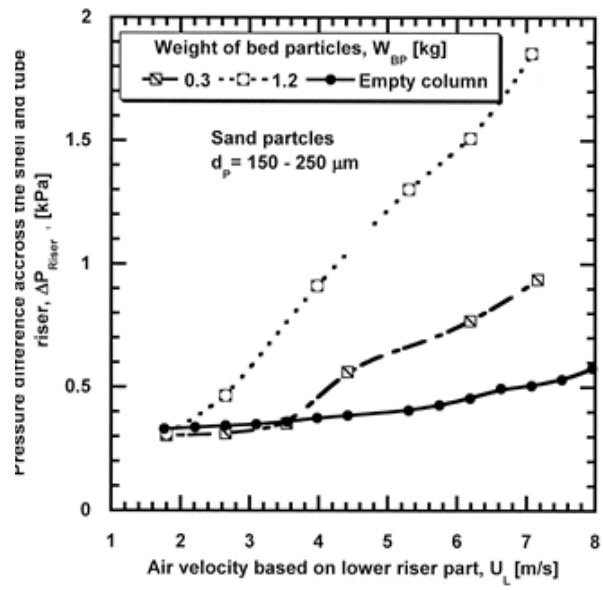

Figure 7. Variation of pressure drop across the shell and tube riser with air velocity in absence and in presence of bed particles

4. Result and discussion: start-up and performance evaluation

The overall performance and hydrodynamic behavior of the current cold model MTCFB are investigated and examined in terms of several operating and design parameters such the grid performance in terms of pressure drop and pressure difference across the top shell and tube riser in absence and in presence of bed particles. The performance of as a normal micro tube fluidized bed, MTFB excluding the cyclone and the downer parts, and finally operation as a MTCFB are also used to judge operation of the MTCFB system.

Major differences of micro-fluidized beds, with 20 cm I.D. or less, from their classical macro-scale counterparts are the critical importance of surface forces and almost unavoidable wall effects due to their small bed size. Surface forces can become dominant over gravity and hydrodynamics forces at the microscale and fluidization could either be hindered or even prevented through the adhesion of particles to the walls of the bed (Nascimento, 2016). A specific wall effect determined as the pressure drop per unit volume of particle bed in excess of the predicted pressure drop from the Ergun equation was proposed to quantitatively account for the influence of bed wall friction (Liu, 2008). Thus, hydrodynamics and overall performance of MTCFB in terms of pressure drop and solid-gas flow behavior, specifically solid elutriation and solid circulation rates, are expected to drastically alters (Yang, 2009). The current study uses a shell and tube riser of a tube bundle having 6.0 mm I.D tubes, which is a real challenge from operation point of view.

4.1. Grid Performance:

The main function of the Grid is to eventually distribute air (reactant fluid) into very small tiny bubbles of a very large specific surface area. Thus, the aperture size of the opening of the gas distributor should be as small as possible to enhance the contact area of the air with the bed. However, this small aperture size will result in a large pressure drop across the grid. This is a paradox. In this current study 7 sheets, 100 μm aperture size per sheet, are used as a one compact sheet of good mechanically properties. The pressure drop across the grid ($\Delta P_{grid} = P_{ref} - P_1$) is measured at various air velocities as show in **Figure 6**. For empty column, ΔP_{grid} increased with the air velocity and reach maximum

of 2.35 kpa at 7.4 m/s air velocity which is very small and accepted pressure difference for safe grid operation. In presence of sand particles at 7.1 m/s air velocity, ΔP_{grid} increased to 2.7 kpa and 3.6 kpa for total loadings of bed particles of 0.3 kg and 1.2 kg, respectively.

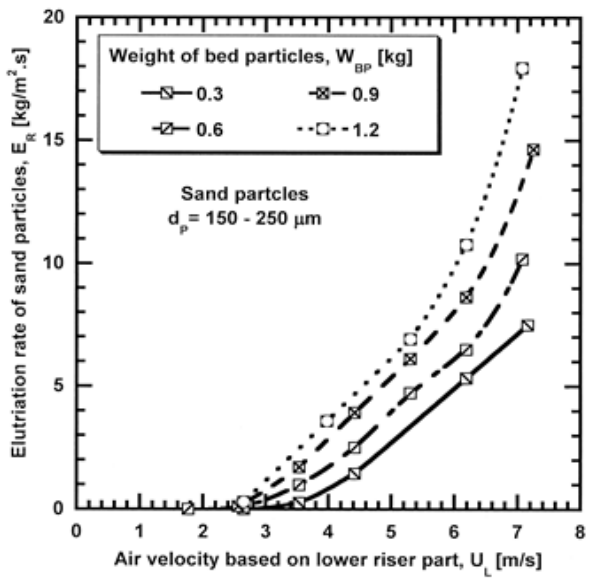

Figure 8. Variation of elutriation rates from a micro-tube fluidized bed, MTFB, of sand particles with gas velocity at different loadings of bed particles

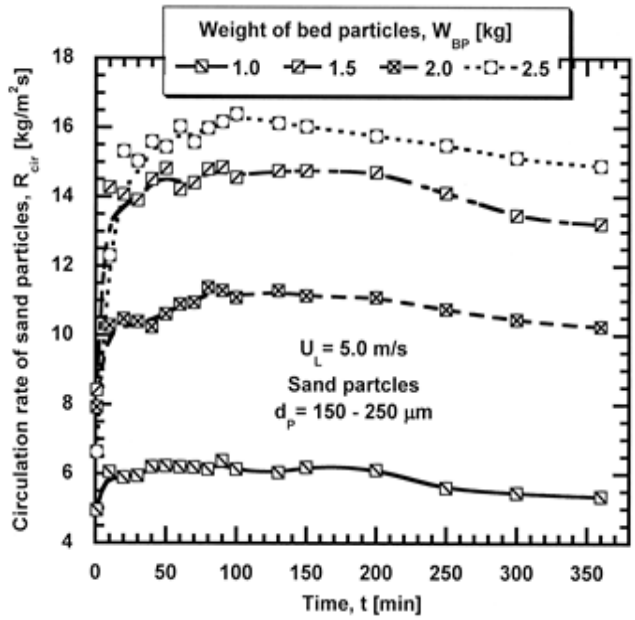

Figure 9. Variation of circulation rates from a micro-tube circulating fluidized bed, MTCFB, of sand particles with time at different loadings of bed particles

4.2. Pressure differences across the shell and tube riser

A very simple U-tube manometer is designed to measure the pressure variation across the whole length of the riser column and plenum chamber. Eight pressure tabs are distributed as flow as shown in **Figure 7**.
The last tap is located just above the tubes of shell and tube riser. The tape of the plenum chamber is a reference point, and it is attached to one end of U-tube manometer which is filled with manometer fluid. the seven tapes are connected to other end of U-tube manometer. A release point is connected to that head to calibrate the U-tube manometer from time to time. The arrangement of the tapes can be use as open end to measure the pressure directly. Besides, it can be used as differential manometer to measure a pressure differences between a reference point and another 7 point across the riser.

Pressure drop across the shell and tube riser (P6 – P7), in presence of narrow tubes, was highly expected. For empty column, ΔP_{riser} increased with the air velocity and reach maximum of 0.6 kpa at 8.0 m/s air velocity which is very small and accepted pressure difference for safe operation. In presence of sand particles at 7.1 m/s air velocity, ΔP_{grid} increased to 0.95 kpa and 1.85 kpa for total loadings of bed particles of 0.3 kg and 1.2 kg, respectively. This would be sufficiently suitable for smooth fluidization.
In an unexpectedly manner, pressure difference across the top riser of 69 narrow tubes, was less than 2.0 % of the atmospheric pressure. This is reasonably accepted, as sudden contraction of the riser area together with extremely high wall effects of the 69 narrow tubes, were expected to create high pressure drop across the top shell and tube riser.

4.3. Operation as normal micro-tube fluidized bed, MTFB:

Dynamic behavior of the MTFB was investigated in terms of elutriation rates of sand particles. Elutriation rates of sand particles were measured at various gas velocities and different loadings of bed particles. The elutriation rates, measured at a top point between the exit of riser and the inlet of cyclone, were measured using a simple bag filter, where the flux of elutriated particles which is simply called elutriation rate or carryover rate, is measured as a flux mass of solid elutriating out of the riser per unit time per cross sectional area of the lower double pipe riser. Cyclone and downer were not connected and the elutriated particles were forced to be collected in bag filter, 20. It is shown in Figure 8 that the elutiation rates were increasing with increasing the gas velocity duo to the higher air draft forces and also it is increasing with the increase of the total loading of the practices charged to the riser. Fluidization runs smoothly even at larger quantities of the silica flour particles, irrespective the operating velocity.

4.4. Operation as a micro-tube circulating fluidized bed, MTCFB:

Performance of the MTCFB was investigated in terms of circulation rates of sand particles. At 5.0 m/s gas velocity, circulation rates of sand particles were measured with time at different loadings of bed particles. Cyclone and downer were installed and connected for MTCFB operation. The circulation rates, measured at the same point at which elutriation rates were measured. Circulation rates were calculated as a flux mass of solid circulating out of the riser per unit time per cross sectional area of the lower double pipe riser. It is shown in **Figure 8** that the circulation rates, at a certain time, were increasing with increasing the loading of the sand particles in the system. For a certain loading of bed particles, circulation rates were increasing to maximum after very short time period less than 10 minutes, then decreased very slightly with time for all loading of bed particles. Slight decrease might be losses of adhering fine sand particles at the top of the cyclone. Attrition rates due to high wall effects might also be responsible for this slight decrease in circulation rates after long time of fluidization. Fluidization runs smoothly even at larger quantities of the silica flour particles.

5. Conclusions:

The current study investigates the overall performance of a new micro-tube circulating fluidized bed, MTCFB. The hydrodynamic performance of the MTCFB was examined by carrying out a cold-model experiments. One of the most important parameters in this experiment are the pressure drops across the grid and the shell and tube riser. Pressure drop were safe and fluidization runs very smoothly in presence and in absence of bed particles for the grid and for the top shell and tube riser of 69 narrow tubes of 6.0 mm I.D. results for pressure drop across the top shell and tube riser, showed that even at high gas velocities, the pressure drop using smaller tube diameter was lower than expected and the MTCFB could be operated safely. Thus, it proved a very good experimental validation even with the paradox between the heat transfer area provided by the shell and tube heat exchanger and the pressure drop across its narrow tubes. Fluidization phenomenon was investigated under operation as normal and circulating fluidization. Fluidization was carried out smoothly and safely, irrespective of the mode of operation as normal or circulating fluidized bed. The study showed that the unit can operate at a great performance using more than 2.5 Kg of silica flour bed at higher gas velocities.

References

Albrecht, M., Rodemerck, U., Linke D., Kondratenko, V., Oxidative coupling of methane at elevated pressures: reactor concept and its validation, *Reaction Chemistry & Engineering*, vol. 3, pp. 151-154, 2018.

Asua, J., *Polymer reaction engineering*, 1st Edition, John Wiley & Sons, 2008.

Galadima, A., Muraza, O., Revisiting the oxidative coupling of methane to ethylene in the golden period of shale gas: A review, *Journal of Industrial and Engineering Chemistry*, vol. 37, no. 5, pp. 1-13, 2016.

Grace, J.R., Lim, C.J., *Properties of circulating fluidized beds (CFB) relevant to combustion and gasification systems*, *in Fluidized bed technologies for near-zero emission combustion and gasification*, 1st edition, editor: Fabrizio Scala, Woodhead Publishing, 2013.

Gyllén, A., Oxygen carrier aided combustion: Implementation of oxygen carriers to existing industrial settings, *Doctoral thesis*, Chalmers University of Technology publishing, 2019-06-05 10:00, Hörsal KC, Kemigården 4, Opponent: Prof. JoAnn Slama Lighty, Dean College of Engineering, Boise State University, USA, 2019.

Hiby, J.W., Untersuchungen über den kritischen Mindestdruckverlust des Anströmbodens bei Fluidalbetten, *Fließbetten*, vol. 36, no. 3, pp. 228-229, 1964.

Kiani, D., Sourav, S., Baltrusaitis, J., Wachs, I.E., Oxidative Coupling of Methane (OCM) by SiO2-Supported Tungsten Oxide Catalysts Promoted with Mn and Na, *ACS Catalysts*, vol. 9, no. 7, pp. 5912-5928, 2019.

Khan, A.M., Kinetic Studies of Oxidative Coupling of Methane Reaction on Model Catalysts, *Master thesis*, King Abdullah University of Science and Technology, Thuwal, Kingdom of Saudi Arabia, April 2016.

Khawaja, H.A., Review of the phenomenon of fluidization and its numerical modelling techniques, *The International Journal of Multiphysics*, vol. 9, no. 4, pp. 397-408, 2015.

Kayode, A.C., *Process safety and pressure-relieving devices, in Ludwig's applied process design for chemical and petrochemical plants*, 4th Edition, Volume 1, Gulf Professional Publishing, 2007.

Liu, X., Xu, G., Gao,S., Micro fluidized beds: Wall effect and operability, *Chemical Engineering Journal*, vol. 137, no. 2, pp. 302-307, 2008.

Lunsford, H.J., The Catalytic Oxidative Coupling of Methane, *Journal of the German Chemical Society*, vol. 34, no. 9, pp. 970-980, 1995.

Mihalski, K., Kaspar, P., Parnell, C.B.Jr., Design of pre-separators for cyclone collectors. *In Proc. Beltwide cotton production conferences*, pp. 1561-1568, Memphis, Tenn., National Cotton Council, 1993.

Mori, S., Moriyama, A., Criteria for uniform fluidization of non-aggregative particle, *International Chemical Engineering*, vol. 18, 245-249, 1978.

Nascimento, ol. do., Reay, D.A., Zivkovic, V., Influence of surface forces and wall effects on the minimum fluidization velocity of liquid-solid micro-fluidized beds, *Powder Technology*, vol. 304, pp. 55-62, 2016.

Paiva, J.M., Pinho, C., Figueiredo, R., The influence of the distributor plate on the bottom zone of a fluidized bed approaching the transition from bubbling to turbulent fluidization, *Chemical Engineering Research and Design*, vol. 82, pp. 25-33, 2004.

Paiva, J.M., Pinho, C., Figueiredo, R., Influence of the distributor plate and operating conditions on the fluidization quality of a fluidized bed. *Chemical Engineering Communications*, vol. 196, pp. 342-361, 2009.

Pandey, A., Bhaskar, T., Stöcker, M., Sukumaran, R., *Recent Advances in Thermochemical Conversion of Biomass*, 1st Edition, Elsevier, 2015.

Pandey, A., Venkata, Mohan, S, Chang, J.S., Hallenbeck, P., Larroche, C., *Biomass, biofuels, biochemicals*, 2nd Edition, Elsevier, 2018.

Parnell, C.B.Jr. Davis, D.D., Predicted effects of the use of new cyclone designs on agricultural processing particle emissions. *ASAE Paper No. SWR-79- 040, Presented at Southwest Region Meeting of the ASAE*, Hot Springs, Ark, 1979.

Richardson, J.F., Coulson, J.M., Sinnott, R.K., *Chemical engineering, volume 6: an Introduction to design (chemical engineering technical series)*, 4th Edition, Elsevier, 2005.

Sharifan, H.R., The study of hydrodynamics in the exit region of a CFB system, *Student Research Project Nr. 3050, Matr.-Nr. 2692131*, Anschrift: Bürgermeister-Smidt-Straße 20 D-27568 Bremerhaven (Building CC-CC419), Ausgabe: 29.06.2011, Abgabe: 29.06.2011, Betreuer: Prof. Dr. G. Scheffknecht and M.Sc. Ajay R. Bidwe, Stuttgart, 12.05.2011.

Shepherd, C.B., Lapple, C.E., Flow pattern and pressure drop in cyclone dust collectors. *Industrial and Engineering Chemistry*, vol. 3i, no. 8, pp. 972-984, :1939.

Siegel, R., Effect of distributor plate-to-bed resistance ratio on onset of fluidized-bed channeling, *AICHE*, vol. 22, no. 3, pp. 590-592, 1976.

Simpson, S., Parnell, Jr.C.B., New low-pressure cyclone design for cotton gins. *In Proc. Beltwide cotton production conferences*, pp. 1193-1201, Memphis, Tenn., National Cotton Council. 1995.

Sobrino, C., Ellis, N., Vega, M.D., Distributor effects near the bottom region of turbulent fluidized beds. *Powder Technology*, vol. 189, pp. 25-33, 2009.

Wang, L., A new engineering approach to cyclone design for cotton gins, *M.S. Thesis*, Department of Agricultural Engineering, Texas A&M University, 2000.

Wang, L., Parnell, C.B., Shaw, B.W., Performance characteristics for the 1D2D, 2D2D, 1D3D and barrel cyclones, pp. 1-14, *ASAE Paper No. 99-4195. Presented at the ASAE Annual Meeting*, Toronto, Canada, 1999.

Whitehead, J.D., Difficulty associated with wind-shear theory of sporadic E, *Journal of Geophysical Research*, vol. 76, no. 13, pp. 3127-3135, 1971.

Yang, S., Yang, H.R., Liu, Q., Zhang, H., Wu, Y.X., Yue, G.X., Wang, Y.Z., Research on Flow Non-Uniformity in Main Circulation Loop of a CFB Boiler with Multiple Cyclones. *In: Yue G., Zhang H., Zhao C., Luo Z. (eds) Proceedings of the 20th International Conference on Fluidized Bed Combustion*, pp. 341-344, Springer, Berlin, Heidelberg, 2009.

Yang, WC., *Fluidization, solids handling, and processing: industrial applications engineering reference manual series PDL handbook particle technology series*, 1st Edition, Kindle Edition, Elsevier, 1998.

Zhang, Y., *Processing and development of polysaccharide-based biopolymers for packaging applications*, 1st Edition, Elsevier, 2020.

Zuiderweg, F.J., Design Report on Fluidization. *In Proceedings of International Symposium on Fluidization*, Editor: Drinkenburg, A.A.H., P. 739, Netherlands University Press, Amsterdam, 1967.

Biography

Dr. Emad A.M. Abdelghani hold a Ph.D. in Chemical Engineering from Gunma University, Japan in 2004 in the field of fluidization engineering and particle processing and handling. He is interested in research focusing on particle technology, specifically fluidization engineering of ultrafine and superfine. Currently, Dr. Emad is interested in tribo-electrification and electrostatic generation in fluidized beds. He published several researches in oil-shale studies, solid grindability, and besides, he is involved in the research in modeling, simulation and optimization of gas-liquid reactors, especially in the field of natural gas treating. Dr. Emad published several researches in the field of water treatment and waste disposal.