Proceedings of the International Conference on Industrial Engineering and Operations Management
Dubai, UAE, March 10-12, 2020

Increasing Coverage Day Aviation Fuel Through Development of Modular Aviation Fuel Terminal System in Aviation Fuel Terminal Tual (Maluku - Papua Area)

Maulana Ardiansyah, Widi satria Nugraha. Novriantari
Reliability & Project Development VIII, Pertamina (Persero)
Jalan Nimboran, Indonesia
widi.nugraha@pertamina.com, novriantari@pertamina.com

Keywords: Aviation fuel, modular system, coverage days. Airplane Filling Depots (DPPU)

Abstract

Aviation fuel demand in Maluku - Papua area experienced a significant increase of 9.6% per year over the course of 2012-2018. However, this increase was not accompanied by the development of infrastructure, it was observed that the average coverage day was as low as 6.9 days. According to fuel terminal design standards there are several classes of fuel terminal based on DOT, Coverage Days, number of tanks, and the type of tank. Based on pareto diagram, the determined problem for Aviation Fuel Terminal Tual is "Low Average Coverage Day in the Aviation Fuel Terminal Tual (<7 Days)" and the alternative solution chosen is Modular Aviation Fuel Terminal System. There are several main materials in said system, namely storage tanks (23 KL), pumps (70 KL / hour), vessel filter, and flow meter. Material specifications are specified through hydraulic and tank design calculation. And obtained by installing Modular Fuel Aviation System in Aviation Fuel Terminal Tual, there was an increase in Coverage day and value creation of 4.17 billion Rupiah.

Introduction

The aviation fuel demand in Maluku Papua area experienced a significant increase of 9.6% per year. However, this increase was not accompanied by the development of infrastructure, it was seen that the average coverage day was low at 6.9 days. If it refers to fuel terminal design standards that there are several classes based on DOT, Coverage Days, number of tanks and the type of tank. Average Coverage Days in Maluku Papua Area is shown in Table. 1. below.

© IEOM Society International

Aviation Terminal	Class	Coverage Day
DPPU SORONG (SOQ)	6	On Project
DPPU RENDANI (MKW)	6	6.6
DPPU PANIAI (NBX)	6	5.0
DPPU MOPAH (MKQ)	6	6.8
DPPU UTAROM (KAI)	6	13.9
DPPU FRANS KAISIEPO (BIK)	6	9.7
DPPU BABULLAH (TTE)	6	On Project
DPPU DUMATUBUN	6	3.1
DPPU SENTANI (DJJ)	4	4.0
DPPU PATTIMURA (AMQ)	5	7.5
Average CD		**6.9**

Table 1. Average Coverage Days in Maluku Papua Area

© IEOM Society International

In general, the concept of Modular Fuel Aviation System is to create a portable / knockdown system for receiving, stockpiling and channeling. So that it can simplify the process of mobilization and installation in the field. Modular Fuel Aviation System, there are 3 main materials, namely modular tank storage which is used as a facilitation for storage and pump filtration meter module as a reception and distribution facility for aviation fuel. The design specifications and calculations are as follows:

1. Pumping system

PUMPING SYSTEM	
RECEIVING PUMP	70 KL/Hr (Head = 65m)
Fluid	Avtur (Jet-A1)
Applicable Code	API 610 Latest Edition
Type	Horisontal, Centrifugal Pump
Pump Driven	Motor Induksi (ExploTion Proof) & Explotion Proof Starter
Electric Source	3 phase, 380 V, 50 Hz
Koneksi	Flange ANSI #150 RF
Speed	Approximate 3000 rpm
Enclosure	TEFC
Area Class	Class I, Div I, Zone I
Material	- Casing : Carbon steel
	- Impeler : 12% Cr
	- Poros : 4140 Alloy Steel
	- Case Wear Ring : 12% Cr Hardened
	- Impeller Wear Ring : 12% Cr Hardened
	- Throat bush : 12% Cr Hardened
Corrosion Allowance	3,2 mm
Bearing	Radial/Thrust
Accessories	
	- Pressure Indicator at inlet and outlet of the pump
	(Pressure Gauge Dial. Dia 5", bourdon type liquid filled glycerine , 1/2" NPTM - Prosses connection ,Range 0-10.5 kg/cm2, Mat'l 316 SS)
	- Y-Strainer, 150# RF, Mesh 100 um, Body A312 Gr TP304 Sch 40S Seamless dia. 4"
	- Check Vale dia. 4" ASTM A216 Gr WCB Class 150#, API Std 600, Flange ASME 16.5 RF, Trim 13% Cr
	- Gate Valve dia 4" ASTM 216 Gr.WCB Class 150#, API 600, Flange ASME 16.5 RF, Trim 13% Cr
	- Start & Stop Push Button

2. Filtration System

FILTRATION SYSTEM	
RECEIVING FILTER SEPARATOR	70 KL/Hr
Fluid	Avtur (Jet-A1)
Applicable Code	EI 1581 Category C, tipe S
Type	Vertikal
Internal Coating	Internal Coating:Epoxy Resin DFT = 150 µm
Accecories	
	- Automatic Air Eliminator
	- Pressure Relief Valve
	- 3/4" Spring Loaded Drain Valve
	- Diffential Pressure Gauge
	- Sampling Probe
	- Gate Valve dia 4" ASTM 216 Gr.WCB Class 150#, API 600, Flange ASME 16.5 RF, Trim 13% Cr (1 upstream - 2 downstream)
	- Water Slug Control Valve/Water defense shut down
	- SIGHT GLAS 1" S304, BODY, 150# FLG, BORROSILICATE
	- Milipore test point
	- Drain Valve - Ball valve 1" ASTM A105 Gr.WCB 150#, Ball SS316 Seat Teflon, Trim SS304 Fire Safe

3. Tank System

© IEOM Society International

FUEL STORAGE TANK MODULAR	
Capacity	23 KL
Size	Length/Height : 5860 mm, Diameter : 2260 mm
Design	Temperature : 60°C, Pressure : ATM
Applicable Code	ASME VIII Div. 1
Material	Stainless steel SS 316 –A240 -316
Fluid	Avtur (Jet-A1)
Type	Horisontal, ISO Tank
Inner Coating	Epoxy linning = 1st 70 µm, 2nd 90 µm, 3rd 90 µm (sand blast SA 2 1/2)
External Coating	Anti corrosive coating = 1st 75 µm, 2nd 75 µm
Modular Structure	Include :
	- Platform
	- Stairway
	- Hand Railing at around Top of The Tank
	- Bridge for tank to tank with handrail
	- ISO Tank Structure (Steel ASTM A36 Painted as Specification)
	- Anti slip external ladder, walkway on top of tank & detachable stainless steel railing during transport

The P&ID details and drawings for the system are as follows

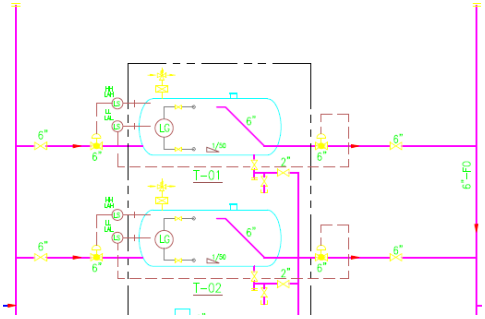

Fig. 1. P&ID Storage Tank

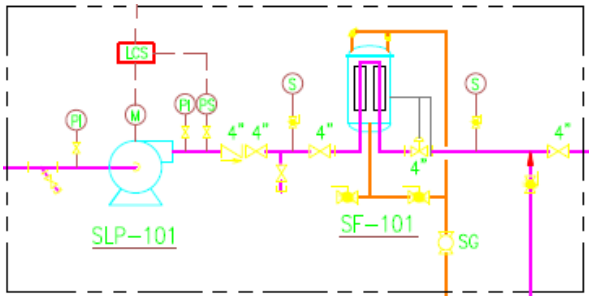

Fig, 2, P&ID Supply Pump & Filtration

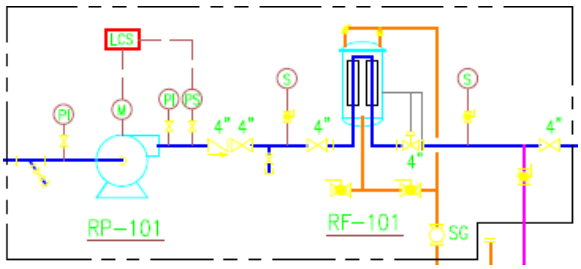

Fig. 3. P&ID Receiving Pump & Filtration

Modular Fuel System Design Calculation

In determining the design calculation there are several main parameters namely hydrolic calculation which considers several things as follows:

© IEOM Society International

Data desain

Nama	Satuan	Nilai	Keterangan
Viskositas	mm^2/s	5	*
Density	Kg/m^3	830	*
Vapor Pressure	Bar	0.11	*
Temperatur Pompa	°C	30	*
Specific Gravity	t/m^3	0.83	*

Diketahui:

- Q (Flow rate) = 70 Kl/Hr (308 GPM)
- D (Diameter dalam pipa) = 4.025 inches
- V (Velocity) = $\frac{0.408xQ}{D^2}$
  - Velocity Receiving Pump to Header
    $= \frac{0.408x308}{4.025^2}$

    = 7.76 ft/s
    = 2.37 m/s
  - Pressure Drop Receiving Pump to Header

Diketahui :

- Q_1 (Flow rate) = 70 Kl/Hr (10566.9 Barell/day)
- f (Moodys Friction Factor) = 0.016
- S_1 (Specific Grafity) = 0.83
- d_1 (pipe inside diameter) = 4.025 inch
- DP (Pressure Drop)
- Ekuivalen Panjang Pipa = 9 m (30 feet)

  $= \frac{0.00115xfxQ^2xS}{D^5}$

  $= \frac{0.00115x0.016x10566.9^2x0.83}{4.025^5}$ per 100 feet

  $= 1.61 \text{ psi x } \frac{30}{100}$

  = 0.483 psi
  = 0.033 kg/cm^2

From the parameters mentioned above we get the differential pressure pump as follows:

- Receiving Pump

From	To	Flow Rate (GPM)	Diameter (inch)	Actual Length* (m)	DP in Line Pipe* (kg/cm^2)	DP in Fitting & Elevation* (kg/cm^2)	Total DP (kg/cm^2)	Velocity (m/s)
Bridger	Pump	308.2	4	30	0.113	0.142	0.255	2.368
Pump	Inlet Tank	308.2	4	17	0.064	1.38	1.444	2.368
Total							**1.699**	

(*) Data panjang pipa dan jumlah fitting merujuk ke KL6-CAL-20-001-A4 "Pump Sizing"

- Supply Pump to Refueller

From	To	Flow Rate (GPM)	Diameter (inch)	Actual Length (m)	DP in Line Pipe (kg/cm^2)	DP in Fitting & Elevation (kg/cm^2)	Total DP (kg/cm^2)	Velocity (m/s)
Inlet Tank	Pump	308.2	4	24	0.09	0.122	0.212	2.368
Pump	Refueller	308.2	4	58	0.219	1.774	1.993	2.368
Total							**2.205**	

(*) Data panjang pipa dan jumlah fitting merujuk ke KL6-CAL-20-001-A4 "Pump Sizing"

© IEOM Society International

Result and Discussion

In this paper, the results are obtained according to the initial target of a significant increase in thruput amounting to 9.6% per year. But this increase was not accompanied by the development of facilities, this looks average low coverage day which is 6.9 days. And obtained with the installation of Modular Fuel Aviation System in DPPU Tual, there was an increase in Coverage day and investment cost savings of 4.17 billion. This innovation has been endorsed by external parties and replication has been carried out for similar work in DPPU Samarinda and Berau.

At the time of Modular Fuel Aviation System application there are potential negative impacts that will arise, but based on the analysis, the potential negative impacts such as the potential of high idle facilities and the difficulty of DPPU operators in operating and maintaining can be overcome through Avtur supply increase in Fuel Terminal Tual as a supply point avtur to DPPU Tual and the creation of a Manual book for the operation and maintenance of the Modular Fuel Aviation System.

© IEOM Society International

Fig. 4. Modular Fuel Aviation System Application

In addition, several modifications were also made because it needed the addition and modification of the piping system, electricity, and layout at the location.

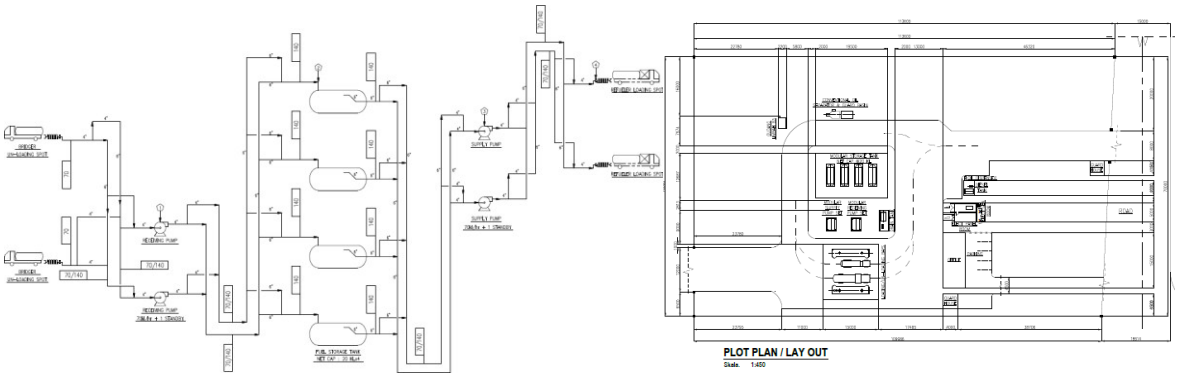

Fig. 5. Modular Fuel Aviation System Modification

Summary

In this paper, through problems that are overcome such as no stockpile, limited refueller, and limited land can be overcome by implementing the Modular Fuel Aviation System. Application of Modular Fuel Aviation System Can Increase Aviation Fuel Stock Reliability in DPPU Tual. The Modular existence at DPPU, especially in Eastern Indonesia, is expected to improve excellent service in serving the distribution of aviation fuel to support aircraft operational activities.

References

1. API 650 “Welded tank for oil storage”
2. API 653 “Tank inspection, Repair, Alteration and Reconstruction.”
3. ACI 318 “Building Code Requirements for Reinforced Concrete”
4. AISC “Manual of Steel Construction”
5. SNI 03-1726SNI 03-1727 “Seismic Resistance Design Code for Houses and Buildings Guide”
6. SNI 03-1729 “Steel Construction for Building Guide for Design”
7. IEC “International Electro-Technical Commission”
8. SNI 04-0225-2000 “Electrical Installation Code and Practice (PUIL)”
9. API 1581, category C, Type S

© IEOM Society International