Sustainable Approach for the Production of Biodiesel from Waste Cooking Oil Using Static Mixer Technology

Chandra Mouli R. Madhuranthakam, Azizeh Mohammad Nour Kamyabi, Gharisa Mohamed Almheiri
Chemical Engineering Department,
Abu Dhabi University
Abu Dhabi, United Arab Emirates P.O.Box. 59911
chandra.mouli@adu.ac.ae
1060243@studentsaduac.onmicrosoft.com

Ali Elkamel
Chemical Engineering Department
University of Waterloo, Waterloo, Ontario, Canada, N2L3G1
aelkamel@uwaterloo.ca
&
Chemical Engineering Department,
Khalifa University of Science and Technology,
Abu Dhabi, United Arab Emirates, P.O.Box. 2533
ali.elkamel@ku.ac.ae

Abstract

This paper aims at designing a large scale plant for the production of biodiesel using 150,000 ton/yr of waste cooking oil produced from various hotels, fast food restaurants, and domestic areas in the UAE. The transestrification reaction considered takes place at 60 ºC, 400 KPa, methanol/oil mole ratio of 6:1, 1wt% KOH and is carried in four parallel PFR each having an arrangement similar to shell and tube heat exchanger (1 shell and 2 passes & 200 tubes per pass) with static mixing elements inserted in each tube to achieve enhanced mixing even under laminar flow conditions. A detailed equipment design for the proposed flowsheet used for this process, its economic feasibility and profitability analysis is thoroughly done. The profit from biodiesel production along with glycerol as a byproduct is found to be $142,877,092 for a ten year project life. Using 5% tax rate for UAE, the discounted profitability analysis showed a payback period of 6 years and with a rate of return of 39%.

Keywords
Biodiesel synthesis, Sustainability, Static mixers, Feasibility, used cooking oil, waste minimization.

1. Introduction
In a world that considers fossil fuel as a major source of energy for almost everything, its high rate of depletion and toxic emissions raised the need for alternative sources to meet the growing energy demand. Biofuel production such as biodiesel is one of these alternatives. It is an organic liquid fuel, fuel additive or extender that is used as a substitute for petro-diesel and derived from different vegetable oils or animal fats [1]. This fuel is biodegradable, nontoxic, free of sulfur and aromatics, and safer to handle and transport. In addition, it can be used in almost all compression-ignition engines without the need of any modifications [2] and has a superior lubricating property making it an excellent alternative fuel [3]. Biodiesel is produced through transesterification reaction of oil/fat with alcohol in the presence of a catalyst to form esters and glycerol. Generally, waste oil is used and preferred over fresh oils as it contributes significantly in the reduction of the process cost since it costs 2-3 times less [4] and manages huge amount of oil from the disposal to water and land sources [5]. Focusing on UAE, the produced waste cooking oil is either dumped in the

drainage or disposed improperly in the water due to its insignificance which causes clogs of the pipes, and disrupts the marine ecosystem. In 2013 Al Bayan published an article saying that "1.2 million tons of cooking oil is used yearly by all the GCC countries where the UAE comes in the second place with a consumption of 24.4% of the total consumption" in another words 292,800 tons of oils is used yearly [6]. Based on article (2018) by Gulf News, Abu Dhabi produces 20,000 liters of used cooking oil each day and about 14,000 restaurants, cafeterias, and hotels in Dubai produces 302,832 liters of cooking oil every single day [7]. Utilizing these huge quantities of oil in a green process for the production of biodiesel synthesis results in the economic growth of the country and supports UAE vision of 2021 aiming in preserving water resources, increasing the contribution of clean energy and implementing green growth plans [8].

Production of any substance should be designed in a way that achieves the objective of carrying out the process safely under optimum conditions in an industrial scale and attains high conversion with lowest cost, byproduct formation, and residence time possible. Thus, this work aims in studying the feasibility of producing high purity biodiesel in UAE from 150,000 ton/yr of waste cooking oil (WCO) at 60 ºC, 400 KPa, using a methanol to oil mole ratio of 6:1, 1 wt% KOH.

A pretreatment unit prior the main unit is considered to remove the fatty acids resulting from constant frying. This highly reduces the saponification reaction in the transestrification reactor. In addition, static mixers are used as reactors for this process rather than the conventional CSTR due to their better mixing ability, less energy consumption (no mechanical stirring), less maintenance requirements (no moving parts), and more compacted geometry (less space consuming) [9] .

2.2 Process Description

The process flow diagram used for the proposed biodiesel plant is shown in Figure 1. The waste cooking oil stream (stream 104) is discharged in a filtration unit (F-100) to remove the solid food particles resulting from the frying process then preheated in a heat exchanger using the esterification reactor product (stream 106A) and fed to the esterification reactor (R-100) to convert the free fatty acids (oleic acid) to methyl esters. During this reaction fresh methanol (stream 101) mixes with recycled methanol (stream 109) and sulfuric acid as catalyst (stream 103). The products of the esterification reaction (stream 106A) are cooled in a heat exchanger which is used to preheat the oil feed simultaneously and then sent to a membrane separator (M.S 100) to separate water, methanol, and sulfuric acid totally from methyl esters, triolein (unreacted oil) and remaining free fatty acid (FFA). The stream that contains methanol, water, and sulfuric acid (stream 107) is charged into a distillation column (T-100) to recycle the most unreacted methanol (stream 109) into the esterification reactor (R-100) again. The bottom product (stream 110) mostly containing sulfuric acid and water was treated as a waste. The pretreated oil from esterification process which is present in membrane separator (stream 108) is then sent to the transesterification reactor (R-200). Before entering the four parallel transesterification reactor (R-200~R-203), a fresh methanol (stream 201) is mixed with a recycled methanol (stream 301) which then mixed with potassium hydroxide (stream 203). Since the catalyst is in the solid state, it is dissolved with methanol in a separated mixing unit (M-200) and then the product of the mixing is heated up to 60 ℃ in (H-200) before entering the reactor. The products of the transesterification reactors (stream 207) are fed to a vacuum distillation column (T-300) where most of the methanol is recovered and recycled back (stream 301) to the transesterification reactor where it is mixed with a fresh methanol (stream 201). The bottom product (stream 302A) mostly containing biodiesel and glycerol is charged to a washing column (X-400), where water is used for biodiesel washing from the leftover methanol, soap, glycerol and catalyst. The top stream leaving the washing column (402) mostly containing methyl esters and unconverted oil is fed to a vacuum distillation column (T-500) to separate the remaining methanol and water from biodiesel and unreacted oil. To achieve a biodiesel with high purity that matches ASTM specifications (stream 501A) is fed to another distillation column (T-600). The overhead (stream 601) contains water and methanol and the bottom stream (602 A) leaving the column mainly contains FAME. The unreacted oil is obtained in the column bottom (stream 502A). The bottom stream that leaves the washing column (X-400) contains glycerol (403) is then fed to a neutralization reactor (R-400) to remove the catalyst. Phosphoric acid is added in equivalence moles of potassium hydroxide that is existing in the stream and the resulting salts (K_3PO_4) are removed and treated as a waste (stream 407) using a horizontal gravity separator (X-401). The resulting glycerol from the neutralization reactor (R-400) is further purified in distillation column (T-700). The top of the column (stream 701) contains water and methanol which is treated as a waste. The column's bottom stream (702A) contains glycerol of 91% purity [10].

2. Process Model

2.1 Process Flow Diagram

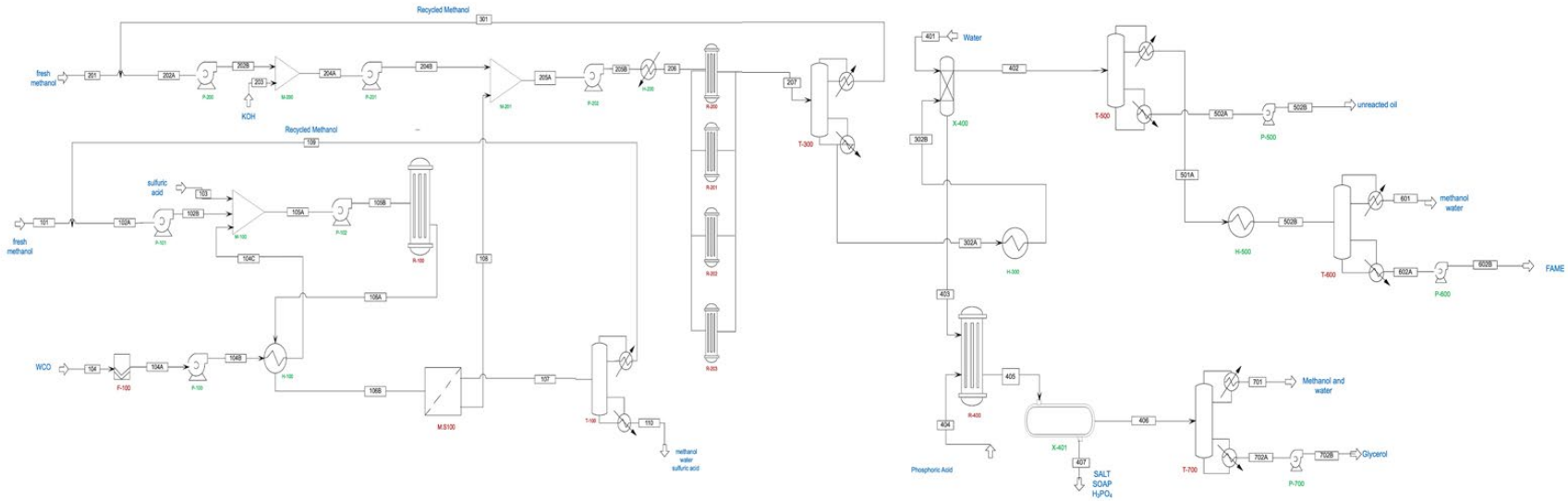

Figure 1- Alkali Catalyzed Transestrification PFD

3. Process Calculations

The major glyceride component in the waste palm oil is triolein however for mass balance purposes the WCO assumed to have 94% triolein and 6% oleic acid resulting from constant frying process. An amount of 150,000 ton/yr of WCO and 330 operating days is considered, thus 22,337 mol/hr of oil will be used as a base for process calculations. From the stoichiometry ratio the required amount of acid, base catalyst, and alcohol are 131.3, 3314, 134024 mol/hr respectively. The overall reaction for the production of biodiesel are:

$$C_{18}H_{34}O_2 + 6CH_3OH \xRightarrow{5\text{ wt.\% } H_2SO_4} C_{17}H_{33}COOCH_3 + H_2O + 5CH_3OH$$

$$C_{57}H_{104}O_2 + 6CH_3OH \xRightarrow{1\text{ wt.\% } KOH} 3C_{17}H_{33}COOCH_3 + C_3H_8O_3 + 3CH_3OH$$

The temperature and pressure data was obtained from a literature [11]. Based on the conversion and the reaction kinetics the amount of product produced by the reactor was calculated. Assumption as: 1- 100% separation of biodiesel from sulfuric acid, water, and methanol in membrane separator, 2- the complete consumption of untreated oleic acid in the transestrification reactor with the base catalyst and produced soap and water (saponification rxn), 3- 94 % of methanol in the feed to T-300 was recovered to the distillate with a composition of 100% methanol, 4- in L-L extraction column (X-400) all of the glycerol, soap, and potassium hydroxide was assumed to be completely removed from the feed stream using water as the solvent. The compositions of the raffinate and extract streams were found using

equilibrium data for the ternary system of biodiesel, water and methanol found in literature [12], 5- 100% separation between the two phases in gravity separator (X-401). For energy balance, as there was no change in kinetic energy, potential energy and shaft work the balance equation was simplified to: $\Delta\dot{H} = \dot{H_{out}} - \dot{H_{in}} = \dot{Q}$, for reactive system the balance was $\Delta\dot{H} = \sum \dot{H_{out}} - \sum \dot{H_{in}} + \sum \xi_i \, \Delta H_{rxn,(25°C)}$, and $\Delta H = V \, \Delta P$ for pumps. Tables 1 and 2 summarize the material and energy balance calculations.

4. Equipment Design

4.1 Reactor

The transestrification reactor was considered for the design since it handles the main conversion of the treated WCO into biodiesel. From different literature reviews, a 6:1 ratio of Methanol to Oil and 1 wt.% of KOH was considered which provides a conversion up to 90% [13] [14] [15]. However, by implementing static mixers with modifications the conversion can be enhanced up 99%. This design aimed in reaching a conversion of 95% of WCO into biodiesel. From lecturer the kinetic for the reaction was founded to be first order with a rate constant of 0.0199 min^{-1} [16]. The design parameters for this unit are shown in Table 3.

To achieve laminar flow in the reactor, a PFR in the shape of a heat exchanger was designed (introducing tubes inside the reactor to reduce the flowrate, thus reducing velocity and reducing Reynolds number to achieve laminar region). Four parallel reactors with similar flowrates was suggested and each reactor consisting of 1 shell and 2 passes and each pass having 200 tubes. In addition, L/D of 50 was considered meaning that each tube contains 50 mixing elements.

For industrial application, the Sulzer SMX static mixers are used more commonly compared to others like the Kenics as it provides more compact design. The continuous SMX consists of two elements fixed in circular tube that is repeated periodically in an axial direction and the flow is induced by applying a pressure difference. The second element is similar to the first element with 90 ° rotation in tangential direction. The three design parameters that determine the mixing in SMX are N_x: the number of cross bars over the width of the channel, N_p: number of cross bars parallel to each other, and θ: the angle btween opposite cross bars. For this work standard Sulzer SMX element consisting of eight cross-bars (four X-shaped pairs of crossed plates over the width of the channel) was considered as it results in good mixing and low pressure drop [17].

4.2 Mixer

Mixer (M-200) is used to dissolve the KOH solid particles with methanol to form meth-oxy solution before entering to other equipment in the process Also, it prevents the clogage and the breakage of the pipes and other equipment such as the pump from the solid KOH. The obtained physical properties from material balance are used for the sizing. Table 4 summarizes the results.

4.3 Pump

P-202 is designed as centrifugal pump and delivers methanol, KOH, Triolein, Oleic Acid and biodiesel to the heat exchanger prior to the transesterification reactors. Table 5 summarizes the design results.

Table 1: Mass Balance Summary

Stream	102B	103	104C	105	105B	106A	107	108	109	110	203	204B	205A	206	207
Temperature (C)	47.06	25	60	60	70	70	58.72	73.79	65.72	93.72	25	25.8	60	60	60
Pressure (KPa)	101	100	400	405.30	400	405.3	101.3	101.3	101.3	101.3	100	400	110	400	400
Total Flow Rate (mol/hr)	8045.26	131.28	22337	30513.96	30513.96	30513.96	8176.61	22337.35	6365.94	1810.66	3313.89	129296.55	151634	151633.9	151633.9
Methanol	0.9995	0	0	0.26	0.26	0.22	0.82	0	0.9994	0.22	0	0.97	0.83	0.83	0.43
H2SO4	0	1.0	0	0.0043	0.0043	0.0043	0.016	0	0	0.072	0	0	0	0	0
Triolein	0	0	0.94	0.68	0.68	0.68	0	0.94	0	0	0	0	0.13	0.13	0.0069
Oleic Acid	0	0	0.06	0.043	0.043	0.0022	0	0.003	0	0	0	0	0.00044	0.00044	0
Water	0.00047	0	0	0.0001	0.0001	0.041	0.15	0	0.0006	0.7	0	0	0	0	0.00044
Biodiesel	0	0	0	0	0	0.041	0	0.057	0	0	0	0	0.0084	0.0084	0.4
KOH	0	0	0	0	0	0	0	0	0	0	1	0.025	0.021	0.021	0.021
Soap	0	0	0	0	0	0	0	0	0	0	0	0	0	0	0.00044
Glycerol	0	0	0	0	0	0	0	0	0	0	0	0	0	0	0.13

Stream	301	302A	401	402	403	404	405	406	407	701	702B	501A	502B	601	602B
Temperature (C)	65.72	122.34	25	60	60	25	60	60	60	65.2	112	193.7	414.7	193.7	414.7
Pressure (KPa)	101.3	30	100	110	110	100	110	110	110	40	50	10	20	10	10
Total Flow Rate (mol/hr)	62172.44	89461.46	40000	63732.87	65728.58	1169.27	66897.86	65661.57	1236.28	43741.51	21920.06	62621.90	1110.97	1415.0613	61206.84
Methanol	1.0	0.0444	0	0.023	0.037	0	0.036	0.037	0	0.037	0	0.024	0	0.97	0.002
H2SO4	0	0	0	0	0	0	0	0	0	0	0	0	0	0	0
Triolein	0	0.011	0	0.016	0	0	0	0	0	0	0	0	0.94	0	0
Oleic Acid	0	0	0	0	0	0	0	0	0	0	0	0	0	0	0
Water	0	0.0007	1.0	0.001	0.60	0	0.64	0.65	0	0.94	0.09	0.001	0	0.022	0.0005
Biodiesel	0	0.68	0	0.95	0	0	0	0	0	0	0	0.97	0.055	0	0.99
KOH	0	0.036	0	0	0.049	0	0	0	0	0	0	0	0	0	0
Soap	0	0.0007	0	0	0.001	0	0.001	0	0.054	0	0	0	0	0	0
Glycerol	0	0.22	0	0	0.30	0	0.298	0.30	0.07	0	0.91	0	0	0	0
H3PO4						1	0.0013	0	0	0	0	0	0	0	0
Potassium Phosphate						0	0.016	0	0.87	0	0	0	0	0	0

Table 2: Energy Balance Results

Equipment Name	**H-100**	**M-100**	**R-100**	**MS-100**	**T-100**	**M-200**	**M-201**	**H-200**	**R200-203**
Δ*H* [MJ/hr]	-117.96	-147.63	275.7	117,042.15	-45.4	-0.245	139.188	275.69	-3595.11
Equipment Name	**T-300**	**H-300**	**X-400**	**R-400**	**X-401**	**T-700**	**T-500**	**H-500**	**T-600**
ΔH [MJ/hr]	243,300	275.69	727.88	4060	0	3670	2840	-1210	8360
Equipment Name	**P-100**	**P-101**	**P-102**	**P-200**	**P-201**	**P-202**	**P-700**	**P-500**	**P-100**
ΔH [KW]	1.743	0.3456	0.437	142	0.435	0.738	556	367	1.743

Table 3: Parameters for R-200

Physical Properties	**Value**	**Design Parameter**	**Value**
Mass flowrate (kg/hr)	23228.197	Volume (m^3)	45.7
Density (kg/m^3)	1274.4	Residence time (hr)	2.5
Volumetric Flowrate (m^3/hr)	18.232	Diameter (m)	0.66
Viscosity (Pa.s)	$4.2408x10^{-4}$	Length (m)	33
Material	Stainless steel	Pressure Drop (KPa)	2.18

Table 4: M-200 Design Parameter

Design Parameter	**Value**	**Design Parameter**	**Value**
Vessel Volume (m^3)	2.38	Liquid height (m)	1.26
Residence time (hr)	1.5	Baffle width (m)	0.11
Vessel dia. (m)	1.26	Residence time (hr)	2.5
Vessel length (m)	1.89	Diameter (m)	0.66
Agitator dia. (m)	0.42	Length (m)	33
Agitator Speed (rps)	29	Mixing power (Kw/m^3)	0.10

Table 5: Centrifugal Pump Design P-202

Design Parameter	**Value**	**Design Parameter**	**Value**
Suction Area (m^2)	4.56×10^{-3}	Suction Velocity (m/s)	0.92
Discharge Area (m^2)	1.14×10^{-3}	Discharge Velocity (m/s)	3.67
Suction Head (m)	19.48	Discharge Head (m)	31.8
Efficiency (%)	50	Hydraulic HP (hp)	0.82
Shaft Power (kw)	1.68	NPSH (m)	16.13

4.4 Heat Exchanger

The heat exchanger (H-100), heats stream (104B) which contains triolein and oleic acid from 25 ℃ to 60℃ and cools stream (106A) containing the esterification reaction output from 70 ℃ to 46 ℃. A 1:8 split-ring floating-head exchanger is considered for the design since its efficiency is high and it can be cleaned easily. Carbon steel will be used both in the shell and tube sides since the pressure is not too high and the corrosive component (sulfuric acid) is present in a very small amount. Further, stream (104B) will be on the shell side and stream (106B) will be on the tube side as it contains sulfuric acid, its pressure and temperature is higher compared to the other stream. The dimensions shown in Tables 6 and 7 were used for the design of the heat exchanger.

Table 6: Shell and Tube Dimensions

Dimensions	Value
Outside Diameter (mm, in)	19.05, 3/4
Inside Diameter (mm)	14.83
Tube length (m)	5
Pitch type and size (mm)	23.81 mm /triangular pitch
Pitch/ diameter	1.25

Table 7: Design Parameters for H-100

Design Parameter	Value	Design Parameter	Value
HE Duty (KW)	216	Heat transfer area (m^2)	43.56
Tubes Area (m^2)	0.30	Tube numbers	146
Bundle Diameter (m)	0.423	Shell ID (mm)	479
Shell Heat transfer Coeff. (w/m2.C°)	488.71	Tube Heat transfer Coeff. (w/m2.C°)	1009.7
Tube Pressure Drop (bar)	1.01	Shell Pressure Drop (bar)	3.305

4.5 Distillation column

T-600 further purifies the biodiesel from methanol and water prior to storage and transportation. It reduces the water content into acceptable limit according to ASTM specifications since the excess amount results in the hydrolysis of the biodiesel therefore reducing its quality. In addition, the excess quantity of methanol in the fuel is highly dangerous as it reduces the fuel's flash point which results in fire at lower temperature. The lower amount of methanol and water in the bottom stream of this column indicates higher separation efficiency. The main design parameters that were taken into consideration were column diameter, height, pressure drop along with actual number of trays (Table 8).

Table 8: T-600 Design Parameters

Design Parameter	Value	Design Parameter	Value
Reflux Ratio	2	Actual number of stages	18
Optimum Feed Location	Between 8th &9th stage from top	Column Diameter (m)	2.45
Total Pressure Drop (kpa)	11.58	Column Height (m)	11.6

4.6 L-L Extraction Column

After leaving the transesterification reactor, the effluent enters a washing column X-400 to wash the biodiesel produced and refine it from the products of the reaction as well as the catalyst used. Number of the theoretical plates was decided based on a similar process that used water to remove glycerol and methanol from biodiesel [18]. Tray type was considered as sieve tray and from heuristics an efficiency of 30% was chosen [19]. The main design results are shown in Table 9.

Table 9: Washing Column Design

Design Parameter	Value	Design Parameter	Value
NTS	4	NAS	13
Column Height (m)	8.12	Column Diameter (m)	1.7

4.7 Gravity Separator

The design of this equipment (X-401) is essential since it allows the physical separation of the solid particles such as potassium phosphate and potassium oleate that is resulted from transestrification and neutralization reaction in the previous units from the liquid phase that consists of glycerol water and methanol before entering the purification unit for glycerol recovery. Settling velocity and tank volume are the main design parameters for this equipment. An assumption of 100% solid-liquid phase separation was made based on the mass balance done previously. The design parameters for this unit are given in table 10. The following design heuristics were employed:

- The most common configuration among horizontal vertical and circular tank is horizontal.
- The detention time is usually from 3-4 hr [20]
- The tank dimension (length to base ratio) is from $\frac{3}{1} - \frac{5}{1}$ [20]
- the depth of tank is 2.5 – 5 m [20]
- The diameter of potassium phosphate (salt) is 0.2 mm

Table 10: Gravity Separator Design

Design Parameter	Value	Design Parameter	Value
Settling Velocity (m/s)	0.10	Tank Volume (m^3)	9.36

5. Economy Analysis

Process equipment costs were estimated from the prices available in Analysis, Synthesis, and Design of Chemical Processes book (fifth edition). The prices were converted from 2001 to 2019 using CEPCI of 640.49 [21]. From the design data and using bare module cost, total plant cost was roughly calculated. Since limited equipment were designed, the remaining scaled up/down based on the inlet flowrate to get an approximate cost of the plant. A 10-year plan was considered with 2 years of construction. The working capital was assumed to be 20% of the Fixed Capital Investment (FCI), where 60% of the FCI was used in the first year and 40% was used in the second year of construction. Land cost is assumed to be 6% of the FCI with a stream factor of 0.9. A tax of 5% and double decline method was considered for profitability analysis. Table 11 and Figures 2 - 4 summarize the economic analysis.

Table 11: Profitability Analysis

Total Module Cost	$ 4,840,849.86	Biodiesel Revenue (per year)	$142,877,092.88
Grass Root Cost (FCI)	$ 8,132,627.77	Glycerol Revenue (per year)	$10,035,639.73
Raw Material Cost (per year)	$37,263,123.51	Undiscounted Payback period (in years)	1.5
Operating Labor Cost (per year)	$1,280,177.34	Cumulative Cash Ratio	4.98
Utilities Cost (per year)	$ 2,835,995.896	ROROI	51%
Manufacturing Cost with depreciation (per year)	$ 55,093,936.78	Discounted Payback period (in years)	5.4
Land cost	$ 487,957.67	Discounted FCI	$1,333,446.68
Working capital	$1,626,525.55	Discounted NPV rate	0.387

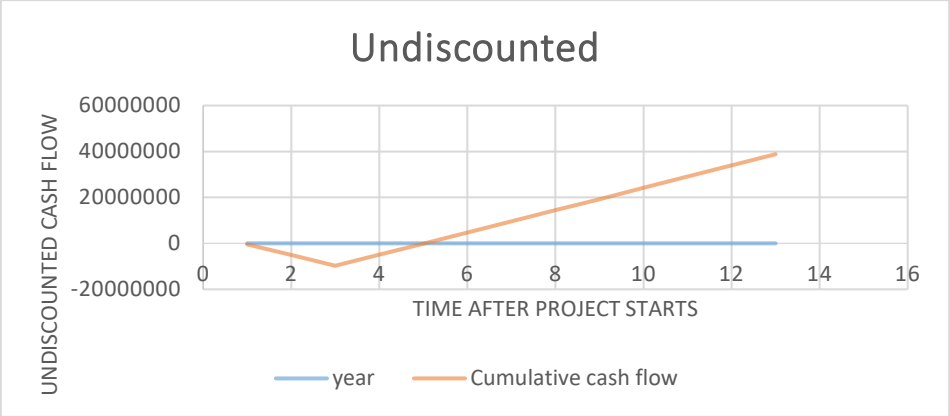

Figure 2-Undiscounted Cash Flow (after tax)

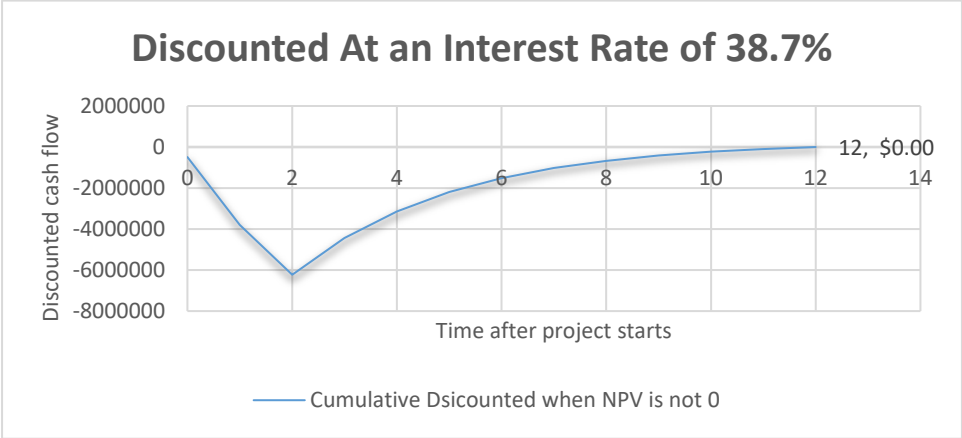

Figure 3- Discounted Cumulative Cash Flow

Throughout this work the optimum conditions were considered from the literature reviews and experimental data's, the physical properties were founded from online calculator and chemical properties handbook, and the prices of raw material and non-designed equipment from reliable resources. For example, as shown in figure 4 the ternary equilibrium data of biodiesel water and methanol was determined at 40°C from literature [12] and plotted in a graph along with different tie lines, the nearest line to the mixture point M were chosen then a parallel line that passes through M were drawn to find the raffinate and extract compositions. Once these data were fixed, detailed mass and heat balance was done as shown in table 1 and 2 and the amount of biodiesel produced was found to be 143,130 ton/yr with purity of 99.75%. The negative sign in EB represents the loss of energy to the surrounding. For the equipment sizing, heuristics and (Analysis, synthesis, and design of chemical processes) book design criteria was used to attain 95% conversion of the oil into biodiesel. To determine the feasibility and profitability of implementing this plant in UAE a rough economic analysis of the plant was investigated. The fixed capital investment calculated is $ 8,132,627 and total manufacturing cost including raw matrial, operating labor, and utilities is founded to be $ 55,093,936.78 $/yr$ in 2019. The annual revenue from this process comes from biodiesel mainly and glycerol as byproduct with profits of $142,877,092 and 10,035,639 respectively (without accounting for costs). To follow the UAE tax rate, a 5% tax rate was applied for the profitability analysis. Using undiscounted cash flow, the PBP was approximately 1.5 year with rate of return on investment of 51%. Using discounted cash flow, ROR that made the net profit value (NPV) equal to zero was found to be 38.74% resulting in FCI of $ 1,333,446 and PBP of 5.4 years.

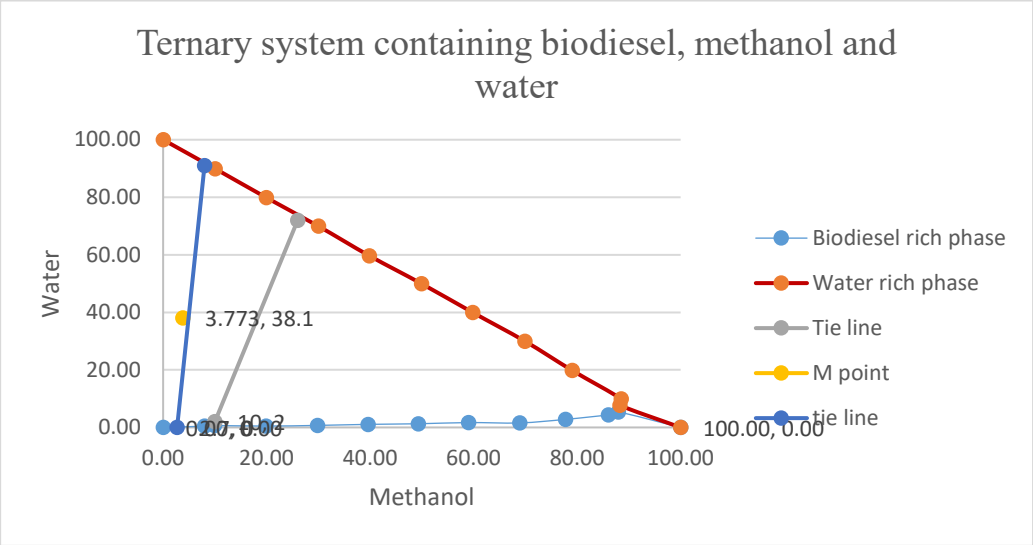

Figure 4- Mass Balance Using Tertiary Equilibrium data from literature [12]

6. Conclusion

Data from various literature reviews were used for performing HMB, sizing, cost estimations, and profitability analysis. The results showed that the transestrification reaction in an optimum condition can produce annually 143,130 ton/yr of biodiesel from a feedstock of 150,000 ton/yr of WPO. Along with high conversion, due to the utilization of static mixers in PFR instead of the conventional CSTR, the process efficiency is higher because of better mixing of the reactants and less energy consumption as there is no agitation system. Considering 10-year plant with 2 years of construction and 5% tax rate for UAE, the economic analysis showed promising outcomes. The undiscounted and discounted analysis main results are PBP of 1.5 year with ROROI of 51% and PBP of 1.5 year with ROROI of 51% respectively. This green sustainable process contributes to UAE 2021 visions and supports the economic goals of the country as well.

References

[1] "Defining Biodiesel," [Online]. Available: http://www.mybiodiesel.com/defining-biodiesel.php.

[2] "WHAT ARE THE ADVANTAGES OF BIODIESEL OVER PETROLEUM DIESEL?," [Online]. Available: https://biocubeco.com/faqs/what-are-the-advantages-of-biodiesel-over-petroleum-diesel/.

[3] N. C. V. L. C. R. T. C. N. K. Achanai Buasri, "Continuous Process for Biodiesel Production in Packed Bed Reactor from Waste Frying Oil Using Potassium Hydroxide Supported on Jatropha curcas Fruit Shell as Solid Catalyst," *applied sciences,* vol. 2, pp. 641-653, 2012.

[4] M. M. A. A. S. Zahira Yaakob, "Overview of the production of biodiesel from Waste cooking oil," *Renewable and Sustainable Energy Reviews,* pp. 184-193, 2013.

[5] K. C. W. a. M. R. I. Arjun B. Chhetri, "Waste Cooking Oil as an Alternate Feedstock for Biodiesel Production," *Energies,* vol. 1, no. 1, pp. 3-18, 2008.

[6] "827 مليوناً استثمارات صناعة زيوت الطعام في الإمارات," Al Bayan, 08 February 2015. [Online]. Available: https://www.albayan.ae/economy/local-market/2015-02-08-1.2306751. [Accessed 13 October 2018].

[7] "Dubai recycles 50,000 gallons of cooking oil everyday," GulfNews, 11 April 20`7. [Online]. Available: https://gulfnews.com/news/uae/environment/dubai-recycles-50-000-gallons-of-cooking-oil-everyday-1.2009473. [Accessed 13 October 2018].

[8] [Online]. Available: https://www.vision2021.ae/en/national-agenda-2021/list/environment-circle.

[9] M. P. J. A. Alex Mazubert, "Intensified processes for FAME production from waste cooking oil: A technological review," *Chemical Engineering Journal,* vol. 233, pp. 201-223, 2013.

[10] T. M. M. A. A. M. G. A. P. C. A. C. Sérgio Moraisa*, "Simulation and life cycle assessment of process design alternatives for biodiesel production from waste vegetable oils," *Cleaner Production,* vol. 18, pp. 1251-1259, 2010.

[11] Y. Zhang, M. A. Dube, D. D. McLean and M. Kates, "Biodiesel production from waste cooking oil: 1. Process design," *Bioresource Technology,* pp. 1-16, 2003.

[12] T. Santos, J. Gomes and J. Puna, "Liquid-liquid equilibrium for ternary system containing biodiesel, methanol," *Journal of Environmental Chemical Engineering,* vol. 6, no. 1, pp. 984-990, 2018.

[13] A. H. a. A. Al-Saif, "Biodiesel fuel production from soybean oil waste as agricultural bio-resource," *Australian Journal of Crop Science,* pp. 538-542, 2010.

[14] M. F. FatihaOuanji, "Production of biodiesel at small-scale (10 L) for local power generation," *INTERNATIONAL JOURNAL OF HYDROGEN ENERGY,* vol. 42, pp. 8914-8921, 2016.

[15] Y.-C. L. K.-H. H. H.-K. W. Kang-Shin Chen, "Improving biodiesel yields from waste cooking oil by using sodium methoxide and a microwave heating system," *energy,* pp. 151-156, 2012.

[16] A. Wanodya AsriKawentar, "Synthesis of biodiesel from second-used cooking oil," *Energy Procedia,* vol. 32, pp. 190-199, 2013.

[17] P. D. A. E. H. M. Mrityunjay K. Singh, "Understanding and Optimizing the SMX Static Mixer," *Macromolecular Rapid Communications,* vol. 30, no. 4-5, pp. 362-376, 2009.

[18] Y. Zhang, M. A. Dube, D. D. McLean and M. Kates, "Biodiesel production from waste cooking oil: 1. Process design and technological assessmen," *Bioresource Technology,* vol. 89, pp. 1-16, 2003.

[19] A. A. Durand, J. A. Miguel, G. D. Barroso and M. L. Garcia, "Heuristics Rules for Process Equipment," Chemical Week, 2006.

[20] "water and wastewater engineering," [Online]. Available: https://nptel.ac.in/courses/105104102/Lecture%206.htm.

[21] S. Jenkins, CHEMICAL ENGINEERING ESSENTIALS FOR THE CPI PROFESSIONAL, 19 April 2019. [Online]. Available: https://www.chemengonline.com/2019-cepci-updates-february-prelim-and-january-final/.

Biographies

Chandra Mouli R. Madhuranthakam is an assistant professor in the department of chemical engineering at the Abu Dhabi University, Abu Dhabi, United Arab Emirates. He earned B.Tech in chemical engineering from Sri Venkateswara University, India Master's in chemical engineering at the Indian Institute of Science, Bangalore, India and PhD in chemical engineering University of Waterloo, Canada. He is a member of the American Institute of Chemical Engineers and the Institute for Operations Research and Management Sciences (INFORMS).

Azizeh Mohammad Nour Kamyabi was an undergraduate student graduated from Abu Dhabi University

Gharisa Mohamed Almheiri was an undergraduate student graduated from Abu Dhabi University

Ali Elkamel is a Professor of Chemical Engineering. He holds a BSc in Chemical Engineering and BSc in Mathematics from Colorado School of Mines, MSc in Chemical Engineering from the University of Colorado-Boulder, and PhD in Chemical Engineering from Purdue University – West Lafayette, Indiana. His specific research interests are in computer-aided modelling, optimization and simulation with applications to energy production planning, carbon management, sustainable operations and product design. Prof. Elkamel supervised over 90 graduate students (of which 35 are PhDs) and more than 30 post-doctoral fellows/research associates. Among his accomplishments are the Research Excellence Award, the Excellence in Graduate Supervision Award, the Outstanding Faculty Award, the Best teacher award, and the IEOM (Industrial engineering and Operations Management) Outstanding Service and Distinguished Educator Award. He has more than 280 journal articles, 141 proceedings, and 33 book chapters. He is also a co-author of four books; two recent books were published by Wiley and entitled Planning of Refinery and Petrochemical Operations and Environmentally Conscious Fossil Energy Production.