Utilization of Upgraded Shredder Blade and Recycling the Waste Plastic and Rubber Tyre

Sekar Ravi
Department of Mechanical Engineering
Rajalakshmi Engineering College
Thandalam, Chennai-602105
India
sekarlravi07@gmail.com

Abstract

The purpose of this project is to realize the importance of plastic shredder for what they serve, realize that the work can get done faster and more efficient when plastics are crushed. The use of machinery is critical for business that is why this machine will be elaborated in order to have more efficient performance for the company and make plastic garbage more effective at the time of operation. The shredder blade is optimized for better grinding of the plastic waste into fine grained particles. It requires less labor work and there is no requirement skilled labor in industry. In recycling, process of plastic waste required low energy due to compact form of plastic waste. It reduces the process time in industry. The machine used in this project is less of cost and thus the project is a cost effective one.

Keywords
Plastic waste, Shredding, Thermoplastic, Thermosetting, Incineration.

1. Introduction
Plastics are synthetic organic materials produced by polymerization. They are typically of high molecular mass and may contain other substances besides polymers to improve performance and or reduce costs. These polymers can be moulded or extruded into desired shapes. Among the two types of plastics, Thermoplastics can repeatedly soften and melt if enough heat is applied and hardened on cooling, so that they can be made into new plastics products. Thermosetting plastics can melt and take shape only once. They are not suitable for repeated heat treatments, therefore after they have solidified, they stay solid. Depending on their structures the pre-treatment equipment used for each type of plastic (crushing or shredding) is often different. The recycling of a virgin plastic material can be done 2-3 times only, because, after every recycling, the strength of plastic material is reduced due to thermal degradation. In India approximately 12 Million tonnes plastic products are consumed every year (2012) which is expected to raise 20 million tonnes by 2020. Since this consumption is rising higher and higher, the shredding is more upgraded to make this process easier. Industrial shredding is a process used for reducing the size of all kinds of materials that area considered to be scrap. The Industrial shredders come in many different design variations and many sizes based on the requirements. Though the size of the blades and the machines varies, the shape of the blades remind unchanged. The following is the new design of the shredder blade and analyses of the blade.

2. Methodology
This project is based on the idea to shred waste plastics for easy processing and disposal. Initially the shredding blade is designed in CAD and then the manufacturing process is carried on. The blade design of the shredder is designed for conventional cutting of the waste plastics and their easy disposal. Later the manufactured blade is being analysed in the analyses software for the theoretical results of the characteristics of the shredder blade. The following block diagram indicates the order of design and fabrication process that has been carried in the optimization of shredder blade.

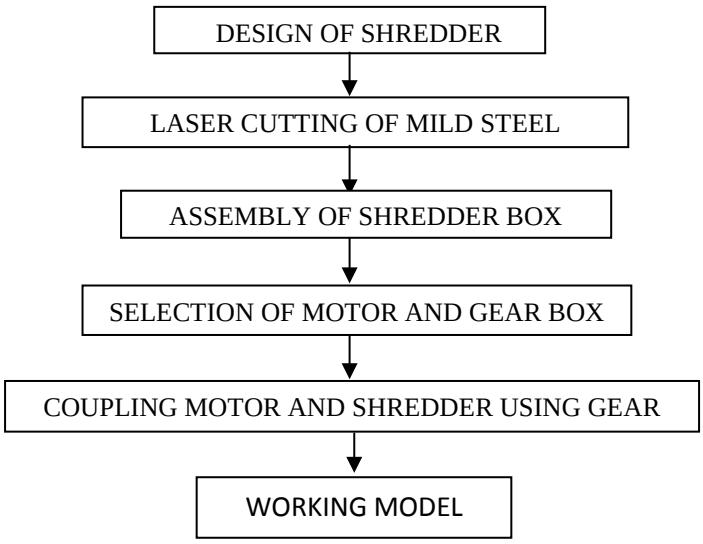

Figure 1. Flow Chart for Fabrication Processes

3. Literature Survey

The method of shredding the plastic is not a recent discovery, similar to other fields the shredding of plastic has come across a large up-gradations. The first-generation shredders are those where the transmission mechanism is driven by a belt with low noise. Then in the second generation of shredders are those where, plastic gear rolls, because it is difficult to master injection and shrinking process accurately of the shredder machine, resulting in the low accuracy of the gear itself. The third-generation shredders are those where the metal sprocket is used. Here the operation is quiet, the loss of energy is low, the efficiency of cutting is much high, and the perfect coordination of the various components of the system achieve the compelling features. Fourth generation of shredders is those where the drive mechanism of shredder machine is the metal gear, although the metal gear so overcome the above drawbacks, it is difficult to avoid the impact of metal gear and friction sound. Then during the fifth generation of shredders the diamond snug movement, it takes use of alloy steel materials, quenching process of metal tool, completely CNC machining technology, and the workmanship guarantee transmission installation accuracy. The sixth generation of shredders which are the modern shredders which are used to break down the high technology content like CD-ROM, floppy disk, tape, video, etc. and the embedded button panel with a protective film ensure the function of the way forward, rewind, and stop. But in the case of modern shredders the motor used is large in size; there is a frequent wear out of the shredder blade. Thus, this project gives the solution of those problems.

4. Designing Parameters of Shredder Blade

The design of the plastic shredder blade comprises an S shape blade body with a center hole for mounting the blade on a rotating shaft. The circular body of the blade has two serrated cutting edges. The circular blade body integrally formed from the base material. The serrated cutting edges are also formed from the base material. The serrated edge is formed by the laser cutting process. This laser cutting process is carried out since the edges are difficult to be processed in the machining processes. The serrated cutting edge has a front face cut from the periphery of the blade body, such that the width of the cutting edge is larger than the thickness of the blade body. The front face and the bottom face of the serrated cutting edge are 80-100 degrees bent from the periphery of the blade body. It is known that the circular blade body has at least one annular protrusion around the hole. The width of the annular protrusion is equal to that of the front face of the serrated cutting edge. Each blade has a circular blade body and two serrated cutting edges of one blade are kept in contact with the counterpart of the other blade of a same set, but at some angle of inclination from the axes. Whereas, in the blades of previous versions, each blade has a circular blade body and serrated edges, and the circular blade body and serrated edges of one blade in kept in contact with the counterpart of the other blade of a same set.

5. CAD Modeling of Shredder Blade

The shredder blade that has been designed by us is created as a model and rendered in one of the designing software known as CATIA by Dassault Systems. The rendered and the drafted image of the designed shredder blade are as following.

Figure 2. Image of the Single Shredder Blade

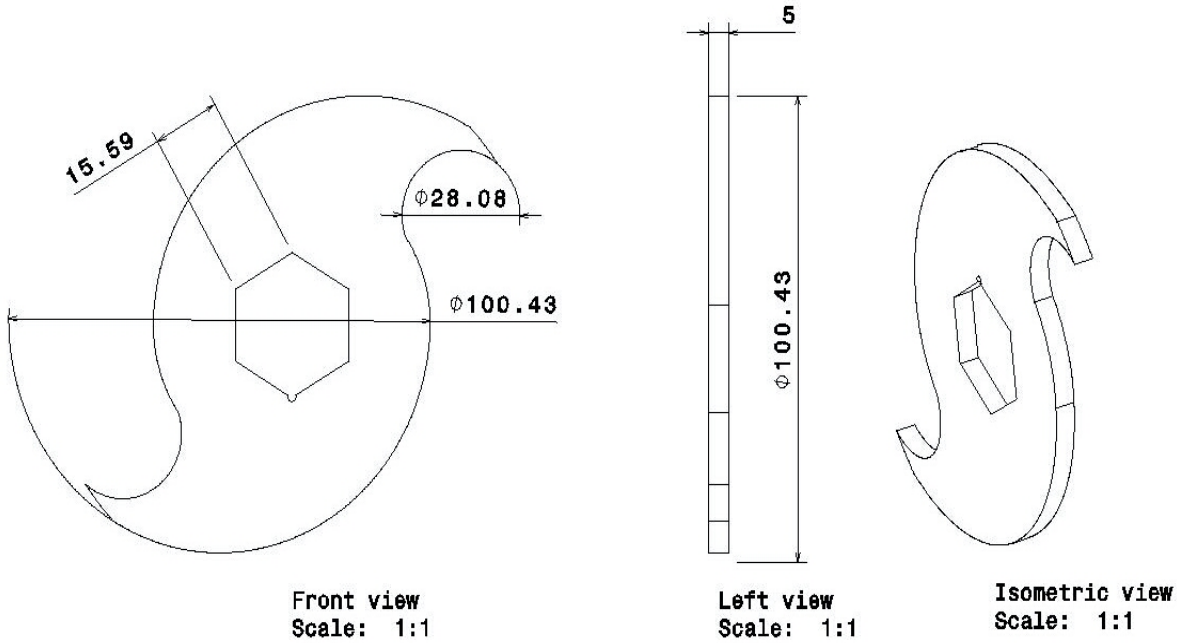

Figure 3. Drafted image of the Single Shredder Blade

The above image (Fig.2) shows the design of the Single part of the shredder blade in the CATIA software. This blade has a new improved design than the existing blades. This shredder blade that has two ends is easier to manufacture and has less problems of wearing out when compared to the other blades. Since there is a series of blades used in the shredder machine there is a better result in the shredding of the wastes. The other image (Fig.3) shows the drafted

image of the single shredder blade. The dimension of the blade has been added for the betterment of the fabrication process.

6. Upgradation in the Blade Design

In the previous versions of blades there are many cutting edges. The reason behind this many numbers of cutting edges is to shred the scrap at a high speed. But the drawbacks in these blades are that the edges when striking a harder surface by chance which is not up to its range of hardness, the blade neither cuts nor ignores the scrap without cutting. Rather the blade strikes the hard surface of the scrap first and then reverses itself in the direction of the rotation of motion and then strikes again the same surface. This action of the shredder blade may result in the delay of the shredding process or the scrap passing through the blade may be left uncut. The reversing action of the blade may also damage the cutting edges of the blades. Thus in order to avoid these problems the design of the shredding blade is being upgraded. In the upgraded blade there are only two cutting edges. These two cutting edges which have a larger surface area for the cutting process, acts on the blade with a high force. This high force acting on the scrap enables betterment in the process of shredding. Since the surface area for the shredding process is high in these blades, the grabbing force is much higher in this case. This force enables the better shredding result than any other blade that is being used currently. Since the blade is made with the Tool Steel material the hardness of the blade is default high in value. In addition to this, the blade undergoes Chromium or Nickel coating. This coating on the surface of the blade enhances the hardness property to increase the effectiveness of the shredding of the blade. The shredder machines of previous versions are of the type which consists of many cutting edges but with less number of blades. But in this type in order to increase the shredding results, increased number of blades with two cutting edges are used as shown in the Fig.4. The previous versions of the shredder machines are those that have six to eight stages of the shredder blades. But these shredder blades have multiple cutting edges. These blades may have advantage at a side, but major drawbacks at the other end. In order to overcome these drawbacks, here in this blade, the number of stages is increased to 14 stages. This increase in number of stages enables us to have a large area for shredding process. This number of stages has been increased not only to have more shredding area, but also to equate the loss of cutting edges that has been reduced in each blade. In addition to these designing, the material property has also been increased. The hardening process carried out during the treatment of the blade increases the strength of the blade. The mild steel heat- treated to the high hardness necessary for a shredder blade is very strong. This can be ten times stronger than the other grades of mild steel. The structural steel or mild steel (HRC 60) used for general construction has a tensile strength of 35,000 pounds per square inch. The hardened mild steel at HRC 60 has a tensile strength about 3, 50,000 pounds per square inch. This increase in the tensile strength increases the hardness of the material. This hard material has high ability of shredding the material.

7. Assembly of the Shredder Blades

The shredder blades that are designed in the CATIA software are assembled by mounting them in a series on the shaft. This assembly of the shredder blade series is shown in the image which is as following.

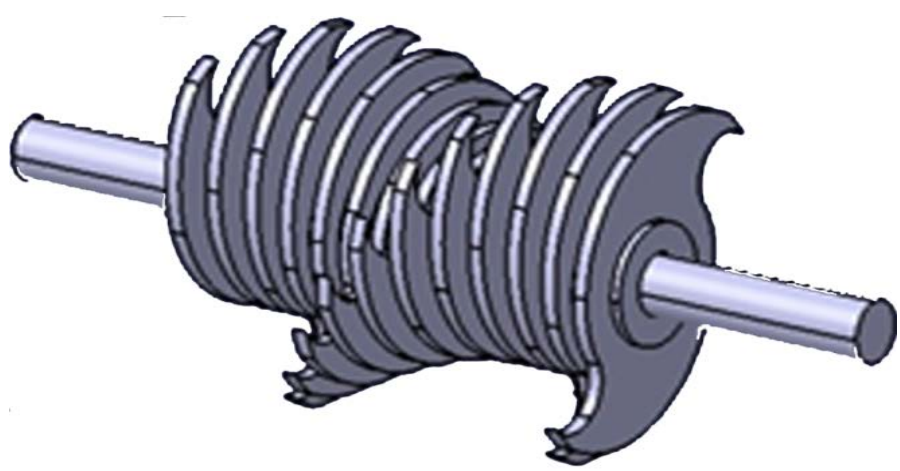

Figure 4. Assembly of the Shredder Blades in Series

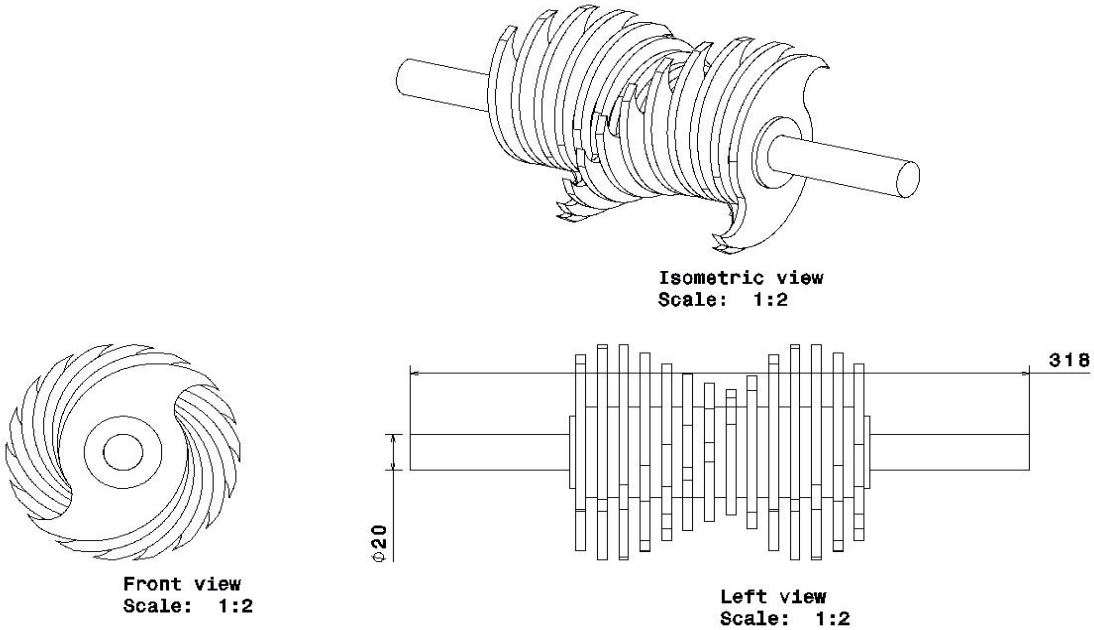

Figure 5. Drafted Series of Shredder Blade assembly

The above image (Fig.4) shows the design of the series of the shredder blade in the CATIA software. This blade has a new improved design than the existing blades. Since there is a series of blades used in the shredder machine there is a better result in the shredding of the wastes. The other image (Fig.5) shows the drafted image of the series of shredder blades. The dimension of the blade has been added for the betterment of the fabrication process.

8. Analyses of the Designed Blade

The designed blade and the assembled blades with the shaft are analyzed by the help of the Ansys software. The individual blade is analyzed by the static structural method. Initially the blade is meshed by tetrahedral meshing type for more accuracy. The blade is meshed and then the parameters such as Friction Coefficient of the blade, Feed ratio, Dynamic Coefficient, Motor Power and specific cutting force are applied. The properties of the material of the blade are preselected and then the conditions of the shredding process such as properties of the scrap are applied. The static structural method gives the stress, strain acting on the body and the total deformation of the body when it comes in contact with the material that is to be shredded.

Table 1. Results obtained by Static structural method

Result	Maximum Value	Minimum Value
Stress (Equivalent von-Mises)	2.4734e6 Pa	0.0021333 Pa
Strain (Equivalent Elastic Strain)	1.2441e-5	1.0838e14
Total Deformation	4.0321e-6 m	0 m

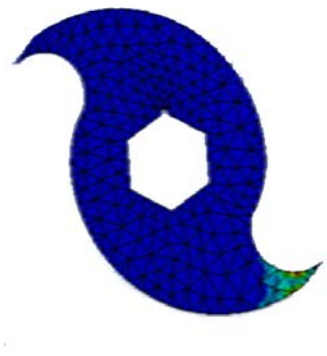

Figure 6. Stress on the blade by static structural method

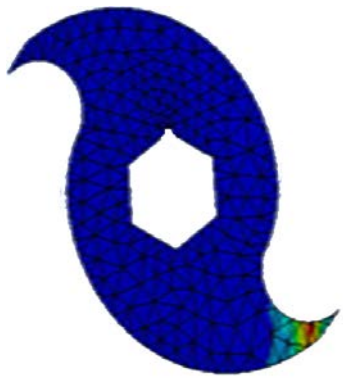

Figure 7. Strain on the blade by static structural method

The above figures are the result obtained by the static structural analyzing method using the software. The stress acts on the tip of the cutting edge at a small range. Thus, the strain on the blade is much less as shown in the figure which is obtained by the hardened properties of the blade material. This strain value is much more reduced by hardening method and chrome plating processes. The following figure shows the deformation of the blade which is comparatively reduced by increasing the properties of the blade. This results in the life span of the blade.

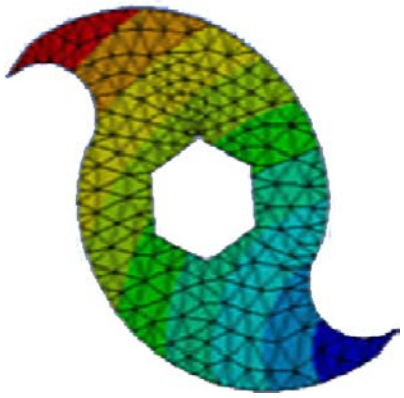

Figure 8. Total Deformation by the static structural method

9. Fabrication Process

9.1 Laser Cutting

Laser cutting is mainly a thermal process in which a focused laser beam is used to melt material in a localized area.[12] The laser optics and CNC (computer numerical control) are used to direct the material or the laser beam generated. The focused laser beam is directed at the material, which then either melts, burns, vaporizes away, or is blown away by a jet of gas, leaving an edge with a high-quality surface finish. The CO_2 laser which is capable of cutting, boring, and engraving, this is used to cut the typical edges if the shredder blade. The reason of Laser cutting done to this that, when the blade undergoes other machining processes, the material properties tend to change. This also results in the reduction of wear resistance. But when the blade is being cut by the Laser cutting method, the property of the material of blade remains unchanged.

Figure 9. Laser Cutting Operation

9.2 Polygonal Turning Operation

Turning is a machining process in which a cutting tool, typically a non-rotary tool bit describes a helix tool path by moving more or less linearly while the work piece rotates. There are many turning operations in lathe. The method we used in our project is a polygonal turning in which non-circular forms are machined without interrupting the rotation of the raw material.

Figure 10. Turning of Our Shaft

9.3 Surface Grinding

Surface grinding which is the most common of the grinding operations. It is a finishing process that uses a rotating abrasive wheel to smooth the flat surface of metallic or non-metallic materials. This will also attain a desired surface for a functional purpose. Here the surface grinding is done to the shredder blade which removes the oxide layer on the surface of the blade which avoids the rusting of the iron used. This grinding operation also removes the impurities on the work piece surface.

9.4 Welding

Welding is a material joining process which produces coalescence of materials by heating them to suitable temperatures with or without the application of pressure or by the application of pressure alone, and with or without the use of filler material. Here in this machine welding is used for making permanent joints between the shaft and the shredder blade. Arc welding is a type of welding that is used with a welding power supply to create an electric arc between an electrode and the shredder to melt the metals at the welding point.

10. Shredding Process

The shredding process which is the type of cutting down the scrap by running the blade at a fixed speed which is being run by the motor which is coupled with the reduction motor. But it is hard to cut down the plastic directly by the shredder blades with small serrated edges. From the time of invention of the shredding process the scrap such as plastic is being processed by some treatment to bring down the strength of the plastic to the level of being cut-down easily. The following are the processes carried out before shredding process: Incineration, Autoclaving, Shredding. But the process of incineration and autoclaving reduces the quality of the product that is to be shredded. In order to reduce the variation in quality during the shredding process, the serrated edges made with increased surface area and hard tool steel. The thickness of the blade is not more than 5mm. Thus, the shredded pieces that are obtained after shredding are less than or equal to 5mm thickness.

Since these pieces are equal to or less than 5mm in size, there is no need to treat the products with heat, which do not reduce the quality of the material. Thus, these pieces can be directly fed into the injection moulding machine. This doesn't use high temperature on the products, which result in a good quality product after the moulding process. This process enables to use the recycled product many times than before since the grade doesn't very much.

11. Conclusion

The plastic shredder machine is widely used in industries for the plastic waste management. By using this plastic shredding machine, the overall costing of recycling process gets reduced. The new design of the blade that is shown above increases the efficiency of the plastic shredding. The life time of this design of the blade is much higher than the previous designs of blades that is being used currently. In recycling process of plastic, waste required low energy due to compact form of plastic waste. This new design of blade reduces the process time considerably than the other blades. As this blade has more resistance against the deformation and principal stresses than the previous designs, this serves as a better part in the shredder machine.

12. References

Winslow, G.R., Liu, S.X., and Yester, S.G., *Study of Plastic Material Recovery from Automotive Shredder Residue*, SAE Tech. Pap., 1998.

Halpin, S., *They're Plastic, but they Recycle, Neuron*, vol.52, no.5. pp.746-748, 2006.

Deng, L., Ghosn, M., and Shao, S., *Development of a Shredding genetic algorithm for structural reliability, Struct. Saf.*, vol. 27, no.2, pp.113-131, 2005.

Umeda, Y., Fukushige, S., Kunii, E., and Matsuyama, Y., *LC-CAD: A CAD system for life cycle design*, CIRP Ann.-Manuf. Technology, vol. 61, no.2, pp. 113-131, 2005.

Senthilkumar, T., Manian, R., and Kathirvel, K., *Effort of blade and operational parameters on shredding efficiency of an experimental cotton stalk shredder*, AMA, Agric. Mech. Asia, Africa Lat. Am, vol.42, no.3, pp.9-13, 2011.

Pasel, C., and Wanzl, W., *Experimental investigations on reactor scale-up and optimisation of product quality in pyrolysis of shredder waste*, Fuel Process. Technologies, vol. 80, no.1, pp. 47-67, 2003.

Lazar, M.B., and Xirouchakis, P., *Mechanical load distribution along the main cutting edges in drilling*, J. Mater. Process. Technologies, vol.213, no.2, pp. 245-260, 2013.

Koehl, M.A.R., Silk, W.K., Liang, H., and Mahadevan, L., *How kelp produce blade shapes suited to different flow regimes: A new rinkle*, in Integrative and Comparative Biology, 2008, vol.48, no.6, pp. 834-851.

Xue, W., Gao, S., Duan, D., Wang, L., Liu, Y., Li, S., *Study on the high-speed rubbing ear behaviour between Ti6AAl4V blade and nickel-graphite abradable seal coating*, J.Tribol, vol.139, no.2, 2017.

Abdelrhman, A.M., Leong, M.S., Hee, L.M., and Hui, K.H., *Vibration Analysis of Multi stages Rotor for Blade Faults Diagonsis*, Adv. Mater. Res., vol.845, pp. 133-137, 2013.

Van Canegehem, J., *Mass balance for POPs in a real scacle fludized bed combustor co-incinerating automotive shredder residue*, J.Hazard Mater., vol. 181, no.1-3, pp.827-835, 2010.

Krajcarz, D., *Comparison metal water jet cutting with laser and plasma cutting*, in Procedia Engineering, 2014, vol.69, pp. 838-843.

Konrad, W., Claus, D., Marcel, H., and Christian, W., *Laser prepared cutting tools*, in Procedia Engineering, 2014, vol.69, pp. 240-248.

Wang, Y.N., and Huang, J.C., *Texture analysis in hexagonal materials*, Materials Chemistry and Physics, vol. 81, no.1, pp. 11-26, 2003.

Jordan Reduction Solutions, *Heavy Duty Granulators*, http://www.jordanreductionsolutions.com

Duchnicz, Wasielewski *Computational method for Determining the Static stiffness of the Saw Blade,* Computers and Industrial Engineering, vol.57, pp. 245-252, 2009.
Charles Ponton, B., *Finite Element Analysis of Industrial Circular Saw blade,* https://vtechworks.lib.vt.edu/handle/10919/31279?show=full
Jordan Reduction Solutions, *Plastic Shredder- Shredder & Grinding Solutions for Plastics,* http://www.jordanreductionsolutions.com/blog/the-difference-between-shredding-grinding-and-granulating/
Hajra Choudary, S.K., Hajra Coudary, A.K., Nirijhar, Third Edition, *Elements of Workshop Technology*, 2017.
Suresh Parekar, R., *Strength of Materials*, Second Edition, Nirali Prakashan, 2013.
Rao, P.N., *Manufacturing Technology*. Fourth Edition, McGraw Higher Ed, 2017.
Anup, Goel., Sabharwal, *Engineering Material and Metallurgy*, Fifth Edition, Technical Publications, 2014.
Khurmi, R.S., Gupta, J.K., *Theory of Machines*, Ninth Edition, Tata McGraw Hill Publications, India, 2018

Biography

Student pursuing his Bachelor of Engineering in Department of Mechanical Engineering from Rajalakshmi Engineering College, Chennai, Tamil Nadu, India. He has published papers titled Design and Fabrication of Ferromagnetic Suspension for Automobiles and Design and Optimization of Plastic Shredder Blade in journals and has presented them in difference conferences held at Kingston Engineering College, Vellore, India and Anna University, Chennai, India respectively. He has done internships in Brakes India Pvt. Ltd and Nokia Communications and Networks, India. He has been a part of the Baja team of his college. He was the Captain of Suspension Subsystem of his college Baja Team named “Redline Racing” which was placed 6th position in 2018. His research interests include manufacturing, simulation, optimization, automotive, and designing. He is an active member of IIW, SAE.