Relationships of Environmental Pollution, Economic Cost, and Public Health: A Structural Equation Modeling Study

Jerico Digno and Venusmar Quevedo
Industrial Engineering Department, College of Engineering
Adamson University
Manila, Philippines
digno.jerico@gmail.com , venusmar.quevedo@adamson.edu.ph

Abstract
This paper extents the research on the relationship of economic cost and the effects on public health of environmental pollution in Philippine context based on the respondents' awareness, perception and attitude through Structural Equation Modeling. Quantitative method was utilized in the study by selecting four hundred Filipino respondents to complete a five-section survey which included a Likert-scale indicating the constructs of the main latent variables. The results were drafted and analyzed using Confirmatory Factor Analysis in Structural Equation Modeling (SEM). The re-specified model proves that 5 latent variables have significant effects to each other as they are observed to have direct and indirect relationships. It is further concluded that awareness on environmental condition can impact the perceived effect of it to both public health and economy, and this perception can both lead to positive attitude towards environmental protection. Results also shows that the costs of environmental pollution to Philippine economy in terms of public health is inevitable and unambiguous and one method to estimate it is through health care expenditure attributed to pollution.

Keywords
Structural Equation Modeling, Environmental Pollution, Economic Cost, Public Health, Confirmatory Factor Analysis

1. Introduction
In developing economies, growth is the primary indicators of long-term economic change. However, the pattern of economic growth is subject to many influences and it is broadly associated with the environment interactions, its long run evolution of environmental quality, and the quality of life of in terms health sustainability. It is clear that the Philippines faces several major environmental problems that directly reduce the health and well-being of the population as well as the performance and growth potential of the economy. As the Philippines chases sustainable economic growth, the issues of environmental pollution and public health must be addressed well. In this study, it aims to address this concern through describing the dynamic relationships of environmental pollution, economy and public health using data based on respondents' knowledge, perception and attitude. More so, this study deals with the questions: (1) What are the significant factors affecting the dynamic interactions of awareness to environmental pollution to Economic cost and Public Health (2) What are the direct relationship and indirect relationship exists between environmental pollution and Economy and Public Health and lastly; (3) How much is the cost to public health brought by environmental pollution?

1.1 Objectives
The fundamental objective of this research is to evaluate the use of Structural Equation Modeling (SEM) in describing the relationships of the environmental pollution to economic cost, and public health based on the respondent's knowledge, perception and attitude. Specifically, the following are the objectives of this research; (1) To identify the significant factors affecting the dynamic interactions of awareness to environmental pollution to economic cost and to public health; (2) To determine the direct and indirect relationship that exists between environmental pollution, economy and public health; and (3). To estimate the cost to public health brought by environmental pollution. Therefore, the main contribution of this paper extents the research on the economic cost and the effects on public health of environmental pollution in Philippines context through Structural Equation Modeling.

2. Literature Review

Relationship between Environmental Pollution and Economic Cost

Although there has been a growing body of literature on economics, environmental quality and public health, most of these studies have explored the relationship between two variables, while systematic study of all three variables is still scarce. According to Grossman and Krueger (1995), the studies on the link between economic development and environmental quality are based on the Environmental Kuznets Curve (EKC) empirical framework. The EKC is an empirical theory explaining an inverted U-shaped relationship between economic growth and environmental decline: as per capita income grows, environmental quality. The EKC is simply a purely empirical theory and cannot justify how economic growth has a diverse effect on the quality of the environment. A that number of studies have obtained various theoretical theories from the EKC to address this problem (Kijima et al, 2011).

Martinico-Perez et al (2018) stated that the environmental Kuznets curve shows that the growing economy entails greater pressure to the environment. Net stock additions grew more slowly and represent a lack of infrastructure investments in the Philippines than waste and emissions. Such a comprehensive report on product flows meets the criteria for data on a new environmental policy framework that simultaneously explores economy and the environment and is previously not available. They also stated that such results call for resource efficiency and recycling measures, for strict enforcement of solid waste management policies, for reducing air pollution and waste water emissions.

Relationship between Public Health and Environmental Pollution

The perception, beliefs and actual scientific knowledge of health issues has been a determining principle of human practice to transform knowledge into effective strategies for improving health and improving quality of life. According to Glanz, et al. (2008) public health improvement and disease reduction is the result of a cycle of endeavors that includes fundamental research focused on determinants and methodologies, intervention research aimed at change and its application in strategic delivery. Accordingly, it is the synthesis of knowledge that leads to theoretical groundings that holds at a time the key to interventions. Empirical evidence shows the value of information as a guide to actions and consequent intervention (Godfrey, et al., 2012).

Public health theories based on data creation over time have been influential in evaluating and changing solutions to waste management by directly coming to understanding public health issues and waste management (Winiwarter, 2002). According to Rabl and Spadaro (2000) the largest proportion of external air pollution costs are the health effects, whilst the damage caused to buildings and crops are relatively small in terms of the overall external costs.

PM2.5 is associated with various adverse health effects, as stated in Yin, Pizzol, & Xu, (2017). These include: all-cause mortality, cardiopulmonary death, respiratory disease, cardiovascular disease and lung cancer and brain damages. Analitis et al (2006) stated that health impacts of PM2.5 were classified to avoid double counting in the successive assessment step. Health impacts were classified into the two categories of mortality and morbidity impacts. Furthermore, they were categorized as either chronic or acute impacts.

Relationship between Public Health and Economic Cost

According to Holland (2014), in addition to the human health burden, there are significant economic and social costs associated with the morbidity and premature mortality caused by air pollution. These include, but are not limited to, premature mortality costs for society, healthcare costs for the ill due to poor air quality and loss of productive capacity in connection with such diseases and/or self-care. Thus the health benefits that can be made by increasing air pollution can be improved by significant cost savings. In turn, 44 million houses worldwide, identified as spending more than 40% of their non-subsistence income on health care payments each year, are expected to face catastrophic health costs and some 25 million are forced into poverty. (Xu et al 2007)

According to Thomas and Strauss (1998) an important economic consequence of household disease or injury is that individuals are unable to perform their usual activities on a daily basis through their effects on functioning. Like being fit and healthy tends to increase productivity (especially in countries with lower income where opportunities for jobs more depend on strength and endurance) so poor levels of health restrict productivity.

According to WHO guidelines (2009), an illness or accident that results in death, disability or misery takes the precious non-market property, individuals and families, each adding to the intrinsic value of human life and happiness. Consequently, calculation of these benefit losses forms an integral part of a full economic welfare study of the effects of illness and injury to households. With this, WHO suggests that available indicators of willingness to pay must

include the evaluation of full economic effects of sickness on households-including the cost of leisure and wellbeing per se. Since the adequate social cost for these health-related welfare losses remains highly uncertain, in the economic impact studies must separate monitoring of market and non-market losses and advise caution in the use and analysis of WTP based measures.

Structural Equation Modeling

Structural equation modeling (SEM) represents a theory-driven data analytical approach for the evaluation of a priori specified hypotheses about causal relations among measured and/or latent variables. SEM is not viewed as a mere statistical technique but rather as an analytical process involving model conceptualization, parameter identification and estimation, data-model fit assessment, and potential model re-specification. Ultimately, this process allows for the assessment of fit between (typically) correlational data, obtained from experimental or non-experimental research, and one or more competing causal theories specified a priori; most common SEM applications are not designed for exploratory purposes. (Hancock and Mueller, 2018)

According to Hair (2016) SEM has become established within a variety of disciplines, especially management research, analyzing cause and effect relations between latent variables. According to Kline (2015) SEM refers to a family of a covariance-based statistical methods. It is also a general statistical modeling technique that is often used in different fields such as sustainability. This is also can be viewed as a combination of factor analysis and regression analysis or path analysis. He further argued that theoretical constructs are represented by latent factors. The relationship between the theoretical constructs are represented by path or regression coefficients between factors. It can also be as Covariance Structural equation modeling since it implies a structure for the covariance between the observed variables. Mardani et al (2017) stated that SEM method has been used in various studies around the world in several different industries like tourism and hospitality industry service and manufacturing industries, transportation industries, firms, universities and other sectors of the industry. They also found that there are several quantitative researches that utilizes the SEM and there is no qualitative research or articles using the SEM.

3. Methods

This study evaluates significant variables in determining the dynamic correlation of the environmental pollution, economic cost and public health and focused on the Structural equation model of these main latent variables based on the respondent's awareness, perception and attitude. To achieve these objectives, quantitative research design is adapted. Survey questionnaires were constructed based on the previously published related study. Data from DENR, WHO and other institutions concerning environmental quality, public health and economics are also gathered. These data are subject for both software and statistical analysis. Appropriate and necessary journals, articles and previous studies related to the subject of this study were used by the researcher in order to conduct the research as well as the validation and thorough explanation of the results.

4. Data Collection

The researcher made use of survey questionnaires in order to gather data that are needed in the study. Survey contains questions that are intended to be answered by the respondents and the answer by the respondents are the basis for the analysis and discussion of the results. The survey is divided into 5 sections. The first section is focused on demographics, Sections 2, 3 and 4 are 5-point Likert-type Rating Scale, in order to assess each constructs in the perspective of the respondents. While section 5 is an open-ended question requiring their insights on issues related to the study. Based on the objectives of the study, the data is obtained through gathering of survey results that considers the factors needed to integrate SEM. The study required residents of the Philippines as respondents of the survey and a total of 400 respondents as sample size is computed based on the population. For the internal consistency reliability the researcher made use of Cronbach's Alpha to test the reliability. Data collected from surveys were entered in Statistical Package for Social Science (SPSS) and has been imported to AMOS software.

5. Results and Discussion

5.1 Reliability Test

To measure the reliability of the 19-item Likert scale research instrument, the researchers ran a Cronbach's alpha reliability test in SPSS Software. The test resulted to a value of .870 which denotes a good internal consistency and is therefore acceptable.

5.2 Hypothesized Model

Figure 1 represents the hypothesized model of this study. It is a combination of the models gathered from other related studies that suggest paths on each variables represented on the model. Based on theory of Reason Action of person's behavior is determined by his/her behavioral intentions, which is a function of his/her attitude towards the behavior and in turn this attitude is influenced by the individual's perception and awareness or knowledge. It appears to be a logical step if formulating a promotional campaign with a strong environmental protection (Jin et al, 2011). This model also represents the claim of Sudarmadi et al (2001) that if people's awareness or knowledge and perception towards environmental issues, it means that people's attitude towards environmental protection or it can lead to change in behavior or intention.

The figure 1 below indicates the researcher's hypothesized existing relationship in relation to the previously published studies. It is further assumed that all of the variables are related and are left free to be estimated. According to Weston and Gore (2006) it is necessary to assign scale in estimating relationships among latent variables, therefore, one parameter per latent variables are set to be 1.0 as seen on the model.

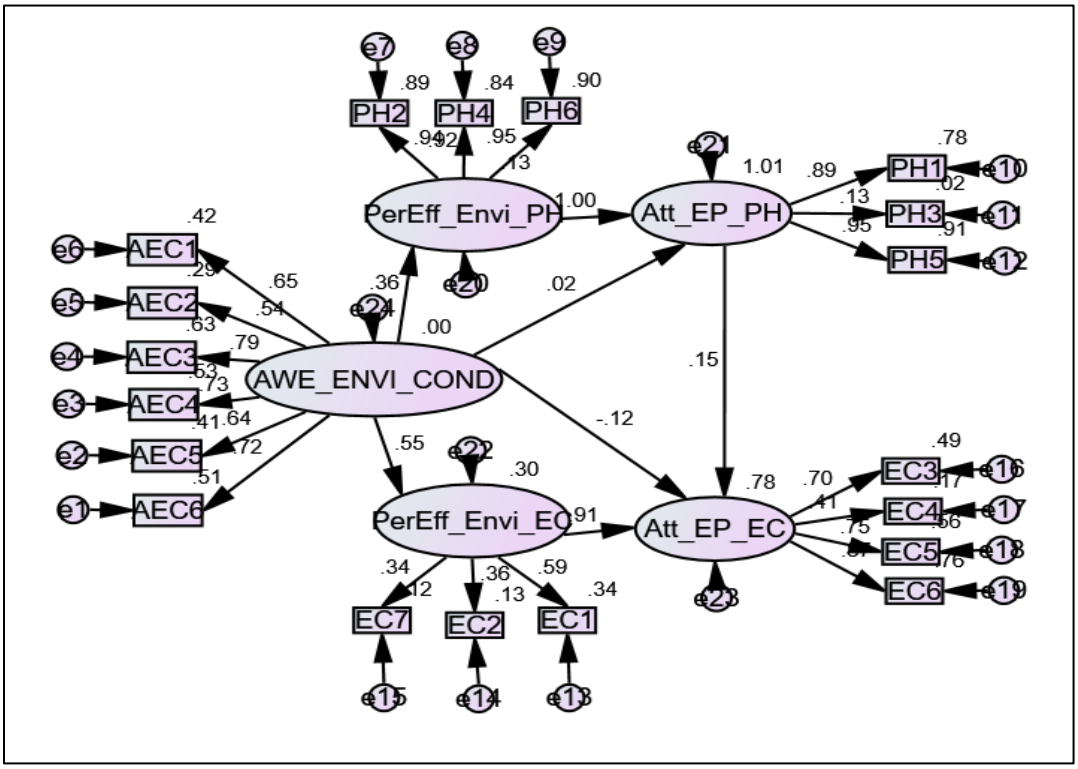

Figure 1: Hypothesized Model

The path coefficients are the standardized regression weights or also called the Beta weight (β). This weights indicates the strength of each indicator to its respective latent variable. The higher the value the stronger the effect. The model shows that there are 5 latent variables namely, Awareness to Current Environmental Condition (AWE_ENVI_COND), Perceived Effect of Environmental to Pollution to Public Health (PerEff_Envi_PH), Perceived effect of Environmental Pollution to Economy (PerEff_Envi_EC), Attitude towards Environmental protection and Public Health (Att_EP_PH),

and Attitude towards Environmental Protection and Economy (Att_EP_EC). Each latent variables are indicated by the items extracted from the survey.

Confirmatory factor analysis was conducted using the hypothesized model in order to identify the significant factors that affects the relationship of all the latent variables. All the necessary procedures to match the assumptions needed was made in order to validate if the tool is appropriate to use. Having a higher weight specifies a greater contribution to the dependent variable. With the confidence interval set as 95%, the researchers rejected the alternative hypothesis stating that awareness to current environmental condition has a direct effect on attitude towards environmental protection and public health and attitude towards environmental protection and economic costs. Thus, eliminating the one headed arrows of the said paths. Also, looking at the result of all the values of each model fit indices, it highly suggest that the model needs to be re-specified and it can still be improved.

5.3 Re-specified Model

Figure 2 shows the improved model after modifications considering the modification indices and suggested alterations that was produced by the hypothesized model. A direct path between Perceived Effect of Environmental Pollution to Public Health and Perceived Effect of Environmental Pollution to Economic Costs is added with a parameter estimate of .88. In relation to the presented regression weights of the hypothesized model, the direct paths between Awareness to the Current Environmental Condition to Attitude towards Environmental Protection and Public Health; and to Attitude towards Environmental Protection and Economic Costs are eliminated since it is not significant at the p-value set by the researcher. Also, considering the modification indices produced by the previous model, some error terms within the same constructs have been co-variated in order to make the model more acceptable as good fit.

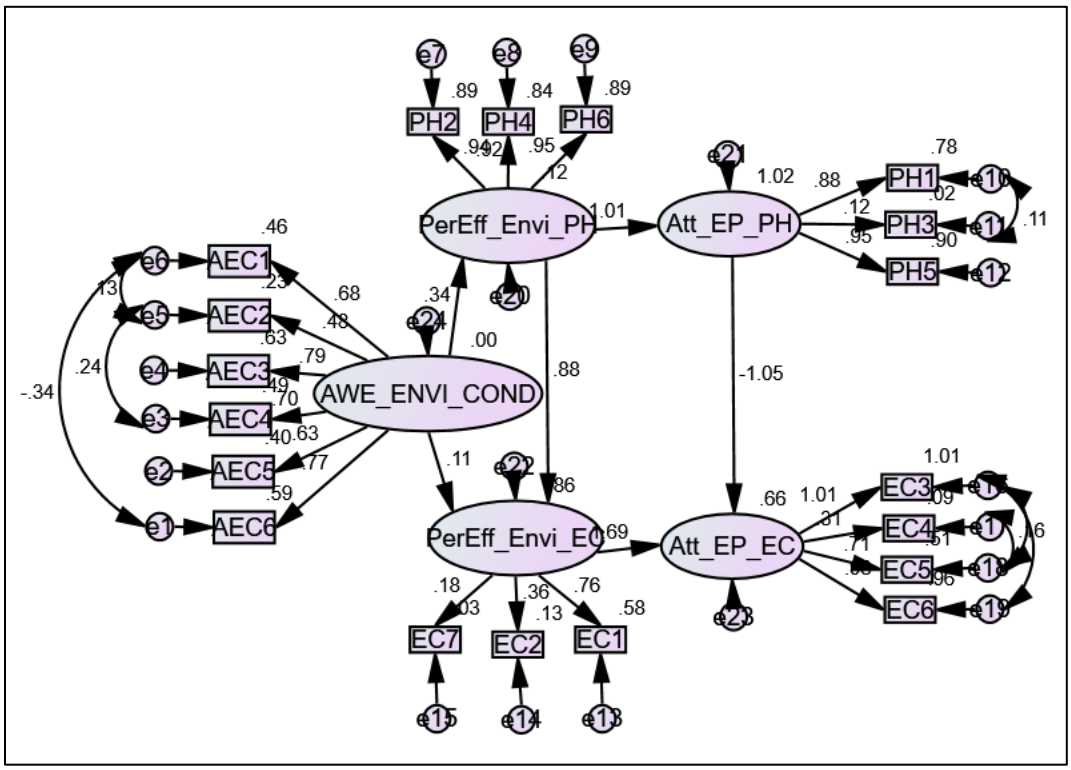

Figure 2: Re-specified Model

Figure 2 also supports the claims of some previously related researches. Some literatures that investigated the relationships between, awareness, perception and environmental attitude shows that there is positive relationships between these variables. According to Aral et al (2017) empirical studies suggest that as people's environmental perceptions and awareness increase, they have more concrete concerns about the environmental problems they face and they are more concerned which in turn implies an increase on attitudes responsible for environmental issues. More so, it supports the result of the study of Jomard (2013) that the relationship between the variables of the health and

economic growth are interchangeable and can affect each other. Study of Chin et al (2019) suggest that there are relationships between public awareness, perception and attitudes towards pollution and willingness to pay for environmental protection. Compared to the hypothesized model, the emerging model has improved the model fit indices. The improved model reflects a comprehensive explanation of the relationship between the previously defined models in relation to the past studies.

5.4 Direct and Indirect Relationships

Table 1: Direct Relationships

	Awe_Envi_Cond	PerEff_Envi_PH	PerEff_Envi_EC	Att_EP_PH	Att_EP_EC
PerEff_Envi_PH	.345	.000	.000	.000	.000
PerEff_Envi_EC	.108	.883	.000	.000	.000
Att_EP_PH	.000	1.011	.000	.000	.000
Att_EP_EC	.000	.000	1.692	-1.052	.000

Table 1 shows the direct effects of the each latent variables to each other. It is observed that there are 6 direct relationships exist between latent variables. The values represents the direct (unmediated) effects of the variables in the columns on the variables on the rows. It means that if there is an increase by 1 standard deviation in column variables, there is an increase standard deviation of row variables according to the values on the table. A negative sign, suggest a decrease.

Table 2: Indirect Relationships

	Awe_Envi_Cond	PerEff_Envi_PH	PerEff_Envi_EC	Att_EP_PH	Att_EP_EC
PerEff_Envi_PH	.000	.000	.000	.000	.000
PerEff_Envi_EC	.304	.000	.000	.000	.000
Att_EP_PH	.348	.000	.000	.000	.000
Att_EP_EC	.331	.430	.000	.000	.000

Table 2 shows the indirect effects of each latent variable to each other. It can be inferred that there are 4 existing indirect effects or relationships between the latent variables defined on the study. This is in addition to any direct (unmediated) effect that a column variable may have to a row variable.

5.5 Cost Estimation

In order to estimate the expenditure or cost of the healthcare attributable to pollution, Preker et al. (2016) derived the formula that assumes a proportional relationship between Total Healthcare Expenditure and Burden of Disease (BoD) share for each pollution risk factors. These risk factors includes Ambient Particulate matter Pollution (APMP), Household Air Pollution, Lead, Water and Sanitation. The following is the formula to estimate the Healthcare Expenditure attributed to pollution (HEAP):

$$\boldsymbol{HEAP = \Sigma\%BODp,t \times THE}$$

Where BoD is the burden of Disease measured in DALYs = sum of YLL (a proxy for mortality) and years of healthy life lost (a proxy for morbidity), THE is the Total health expenditure measured using national health accounts and reflects public and private sector spending on health care across the entire population, p Is the Pollution Risk factors and; t is the time or year.

Due to lack of data available, the researcher used and assumed that the %BoD of the country on the years 2016-2018 is the same. Furthermore, instead of using some of Pollution Risk Factor, the researcher have decided to use the percentage of burden of disease attributable to environmental risk factor only since it also includes risk factors of

unsafe water; sanitation and hygiene, indoor air pollution from solid fuel use and outdoor air pollution (WHO 2009). According to WHO (2016) 22% is the death or Burden of disease attributed to Environment in the Philippines, thus this percent of BoD will be used on the estimation.

Table 3: Estimated Healthcare Expenditure

Year	Estimated Expenditure (in Million Pesos)	% in GDP
2016	132,529.55	0.8%
2017	147,555.07	0.9%
2018	159,817.48	0.9%

Table 3 shows the estimated healthcare expenditure attributed to pollution. The results are compared to the gross domestic product (GDP) of the Philippines on the same years in order to further assess the economic impact of the pollution in public health. The table below shows that healthcare expenditure attributed to pollution corresponds to about 0.8%-0.9% of the GDP on the observed year. It is important to note that this estimation only includes the healthcare expenditure and does not include some economic parameters to assess the impact of environmental pollution in the economy as a whole in the context of public health.

6. Conclusion

The research tool verified the items that are essential indicators of the recognized unobserved variables. It proves that the 5 latent variables namely, Awareness on Current Environmental Condition; Perceived Effect of Environmental Pollution to Public Health; Perceived Effect of Environmental Pollution to Economy; Attitude towards Environmental Protection and Public Health; and Attitude towards Environmental Protection and Economy are all significant and have significant effects to each other as they are observed to have direct and indirect relationships.

As the result of the study, it is found out that there are 6 direct relationships and there are 4 indirect relationships exist between latent variables. Awareness on Environmental Current Condition directly affects the Perception on Effects Environmental Pollution to Public Health and to Economy. Also, the Perceived Effects of Environmental Pollution to Public Health directly affects the Perceived Effect of Environmental Pollution to Economy and a strong direct effect to the Attitude towards Environmental Protection and Public Health is concluded. Also, Attitude towards Environmental Protection and Economy is strongly affected by the Perceived Effect of the Environmental Pollution to Economy. The results suggest that an increase on Attitude towards Environmental Protection and Public Health suggest a decrease on Attitude towards Environmental Protection and Economy.

There is a mediated effect of Awareness to Environmental Pollution to Perceived Effects of Environmental Pollution to Economy; Attitude towards Environmental Protection and Public Health; and to Attitude towards Environmental Protection and Economic Cost. Also, there is indirect effect of Perceived Effect of Environmental Pollution to Public Health to Attitude towards Environmental Protection and Economic Costs.

The results shows that the estimated ratio of the healthcare expenditure attributed to pollution to the Gross domestic Product (GDP) of the country is almost 0.8% to 0.9%. Hence, the estimated economic damage of the pollution to public health is significant and unambiguous.

References

Analitis, A., Katsouyanni, K., Dimakopoulou, K., Samoli, E., Nikoloulopoulos, A.K., Petasakis, Y., Touloumi, G., Schwartz, J., Anderson, H.R., and Cambra, K.,. Shortterm effects of ambient particles on cardiovascular and respiratory mortality. *Epidemiol* 17, 230e233. http://dx.doi.org/10.1097/01.ede.0000199439.57655.6b., 2006.

Aral, N., Bayram, N., and Celik, C. A Study of Relationship between Environmental Awareness and Environmental Attitudes among High School Students. *International Journal of Recent Advances in Organizational Behaviour*

and Decision Sciences (IJRAOB) An Online International Research Journal (ISSN: 2311-3197) 2017 Vol: 3 Issue: 1, 2017.

Chin YSJ, Public awareness and support for environmental protection—A focus on air pollution in peninsular Malaysia. PLoS ONE 14(3): e0212206. Available: doi:10.1371/journal.pone.0212206, 2019

Glanz, K., Rimer, B.K. and Vishwanath, K. Health Behaviour and Health Education, Jossey-Bass, San Francisco, CA

Godfrey, L., Scott, D., Difford, M. and Troiss, C. (2012), "The effect of data on waste behavior: the South African waste information system". Available: http://researchspace.csir.co.za/ dspace/bitstream/10204/6402/1/Godfrey1_2012.pdf., 2008.

Grossman, G.M., Krueger, A.B., Environmental Impacts of a North American Free Trade Agreement (No. W3914). *National Bureau of Economic Research*, Cambridge, MA, USA. 1995.

Hair, J.F., Jr.; Hult, G.T.M.; Ringle, C.; Sarstedt, M. A Primer on Partial Least Squares Structural Equation Modeling (PLS-SEM); *Sage Publications Inc.*: Thousand Oaks, CA, USA, 2016.

Hancock, G. R and Mueller, R. O., Structural equation modeling. In The reviewer's guide to quantitative methods in the social sciences (pp. 445-456). Routledge, 2018.

Holland, M. Cost Benefit Analysis of Final Policy Scenarios for the EU Clean Air Package; *The International Institute for Applied Systems Analysis*: Laxemburg, Austria, 2014.

Jin, Liyan & Zhang, James & Xingdong, Ma & Connaughton, Daniel. Residents' Perceptions of Environmental Impacts of the 2008 Beijing Green Olympic Games. *European Sport Management* Quarterly Vol. 11. No. 3. 275-300. 10.1080/16184742.2011.577791, 2011.

Jomard, Atheel. The Relationship between Health and Economic Growth. Available: https://www.researchgate.net/publication/334593175_The_Relationship_between_Health_and_Economic_Growth, 2013.

Kijima, M., Nishide, K., Ohyama, A., EKC-type transitions and environmental policy under pollutant uncertainty and cost irreversibility. *J. Econ. Dyn*. Cont. 35 (5), 746e763., 2011.

Kline, R.B. Principles and Practice of Structural Equation Modeling; *Guilford Publications*: New York, NY, USA, 2015.

Mardani, A., Streimikiene, D., Zavadskas, E., Cavallaro, F., Nilashi, M., Jusoh, A., & Zare, H. Application of Structural Equation Modeling (SEM) to solve environmental sustainability problems: A comprehensive review and meta-analysis. *Sustainability,* 9(10), 1814, 2017.

Martinico-Perez, M. F. G., Schandl, H., & Tanikawa, H.. Sustainability indicators from resource flow trends in the Philippines. Resources, Conservation and Recycling, 138, 74-86. 2018

Preker AS, Adeyi OO, Lapetra MG, Simon DC, Keuffel E. Health Care Expenditures Associated With Pollution: Exploratory Methods and Findings. *Ann Glob Health*. 2016;82(5):711-721. doi:10.1016/j.aogh.2016.12.003, 2016.

Rabl, A., Spadaro, J.V.. Public health impact of air pollution and implications for the energy system. *Annu. Rev. Energy Environ*. 25, 601e627. http://dx.doi., 2000.

Sudarmadi, S., Suzuki, S., Kawada, T. et al. A Survey of Perception, Knowledge, Awareness, and attitude in Regard to Environmental Problems in a Sample of two Different Social Groups in Jakarta, Indonesia. *Environment, Development and Sustainability* 3, 169–183. https://doi.org/10.1023/A:1011633729185, 2001.

Thomas D, Strauss J. The micro-foundations of the links between health, nutrition and development. *Journal of Economic Literature*, 36: 766-817. 1998.

Weston, R., & Gore Jr, P. A. A brief guide to structural equation modeling. The counselling psychologist, 34(5), 719-751.\ , 2006.

WHO. Country profiles of environmental burden of disease, World Health Organization. Available: www.who.int/quantifying_ehimpacts/countryprofiles, 2009.

WHO. Deaths attributable to the environment Data by country. Available https://apps.who.int/gho/data/node.main.162 , 2016.

WHO. WHO guide to identifying the economic consequences of disease and injury. 2009. Geneva: WHO. Available: http://www. who. int/choice/publications/discussion_papers/en/index. Html., 2016.

Winiwarter, V. "History of waste", in Bisson, K. and Proops, J. (Eds), *Edward Elgar Publishing*, Waste in Ecological Economies, Cheltenham. 2016.

Xu K, Evans DB, and Carrin G . Protecting households from catastrophic health expenditures. *Health Affairs*, 26: 972-983. 2007.

Yin, H., Pizzol, M., & Xu, L.. External costs of PM2. 5 pollution in Beijing, China: Uncertainty analysis of multiple health impacts and costs. Environmental Pollution, 226, 356-369, 2017.

Biographies

Jerico C. Digno, is a graduate of Bachelor of Science in Industrial Engineering in Adamson University, Manila, Philippines. He was a scholar of the Department of Science and Technology-SEI and a recipient of Kayan Chan, another scholarship from a private company. He gained his internship at Calaca Power Plant Complex as part of the Safety Engineering Department. He is also a Lean Six Sigma Yellow Belt certified.

Venusmar C. Quevedo, Ph.D., is a Full Professor of the Industrial Engineering Department of Adamson University, Manila, Philippines. Her fields of specialization include educational research and evaluation, productivity and operational excellence, quality management systems, optimization techniques, operations research and project management. She is a certified Professional Industrial Engineer and ASEAN Engineer.