DUAL CYCLE COGENERATION PLANT FOR AN OPERATING DIESEL POWERPLANT

Moses Jeremiah Barasa Kabeyi

22064693@dut4life.ac.za

Industrial Engineering Department, Durban University of Technology, Durban South Africa

Oludolapo Akanni Olanrewaju

oludolapoo@dut.ac.za

Industrial Engineering Department, Durban University of Technology, Durban South Africa

ABSTRACT

In this study, a cogeneration plant is proposed for generation of extra electricity using a steam turbine running on steam produced from heat recovered from exhaust heat. An engine convers just 30 to 40% of energy in fuel to useful power with the rest being lost in the cooling and exhaust systems. This study demonstrates the potential of Kipevu I diesel power plant to recover waste heat and utilize the same for electric generation. This will help to boost plant capacity making it a more reliable source of standby power. This is achieved through performance analysis of the plant to determine its availability and reliability as well as designing, sizing, and selecting the suitable interfaces for cogeneration system suitable for the plant. The key interfaces shall include the heat exchanger, the boiler (with feed pump, economizer, super heater, and preheater), the steam turbine and the turbogenerator. In the proposed development an exhaust gas boiler is used to generate steam using exhaust heat, the wet steam is superheated in a superheater heater at a mass flowrate f 2.8 kg/s and then used to run a steam turbine for extra power generation from a generator that is coupled to the steam turbine.

Key Words: Diesel power plants; cogeneration; combined cycle; Rankine cycle; Diesel engine; Kipevu 1.

1.0. INTRODUCTION

Internal combustion engines are widely used in transport, agriculture, and power generation as prime movers for both medium and heavy-duty machinery including electric generators in power plants. However, these engines convert less than 40% of fuel power to useful work with the rest being lost through the exhaust and cooling systems. Through waste heat recovery technology, the low-grade heat in the cooling system can be recovered effectively with the organic Rankine cycle(Kabeyi & Oludolapo, 2020d; Wilson, Singh, Singh, & Subramanian, 2017). Generally, an internal combustion engine releases 30-40% of the fuel energy from combustion through the exhaust to the environment and an almost equal amount through the engine coolant (Wilson John M. R., et al., 2017). This energy is just sufficient for recovery and for use in many thermal applications with minimal heat losses in the designed waste heat recovery system(Barasa, 2018; Kabeyi & Oludolapo, 2020d; Wilson et al., 2017).

Cogeneration is also known as combined heat and power (CHP), and it can be defined as the simultaneous production of heat and power, utilizing a single primary fuel source. Industrial Power plants and heat engines in general, waste up to more than half its available energy in form of heat(Oludolapo & Kabeyi, 2020).With a suitable CHP system, excess heat that would normally be wasted can be captured and converted into electricity. By converting this excess energy into useful power, we can achieve efficiencies as high as 89 % (Clarke, 2011). This in turn means there is less fuel needed to run the plant engine, thus by making it so, then there is less pollution produced to the environment. While cogeneration has been used in power plants for a while now, we will discuss a provision of the same in the Kipevu-1 power station Combined heat and power (CHP) systems in both power stations and large plants are becoming one of the most important tools for reducing energy requirements and consequently the overall carbon footprint of fundamental industrial activities(Kabeyi & Oludolapo, 2021). While power stations employ topping cycles where the heat rejected from the cycle is supplied to domestic and industrial consumers, the plants that produce surplus heat can utilize bottoming cycles to generate electrical power.

The overall objective of the study is to design a diesel cogeneration and carry out performance analysis for Kipevu-1 power plant. The specific objectives were to carry out a performance analysis of Kipevu-1 power station and propose measures to convert it to a dual cycle power plant working on both a diesel engine cycle for engines and Rankine cycle from steam generated from engine exhaust heat.

1.1. Benefits of Cogeneration for IC Engines

Cogeneration is a system of commercially available technologies that decrease total fuel consumption and related greenhouse gas (GHG) emissions by generating both electricity and useful heat from the same fuel input. Cogeneration is a form of local or distributed generation as heat and power production take place at or near the point of consumption. For the same output of useful energy, cogeneration uses far less fuel than the traditional separate heat and power production, which means lower greenhouse gas (GHG) emissions as fossil fuel use is reduced. The advantage of the combined production of heat and power results from the more efficient use of fuel, and corresponding reductions in the emissions of SO_2, NO_x and CO_2. The advantages of the combined production of heat and power relate often less to the improved technical efficiency. More often, the fuel switch from coal to gas produces then bigger advantage, based on the ecological advantages of natural gas. With a proper comparison between separate or combined production of heat and power in modern facilities, the energy advantage amounts to 15-20%, this is still significant from an ecological viewpoint(Kabeyi, 2020a; Kabeyi & Oludolapo, 2020c, 2020e).

1.2 Kipevu I Diesel Power Station

Kipevu I power plant utilizes Heavy Fuel Oil (HFO) whose calorific value is almost that of diesel. The plant is located at the Coastal region of Kenya, Mombasa. The Kipevu I thermal power station which was constructed through project procurement between the government of Kenya and Japan, commenced its commercial operations in December 1999 and has been operating satisfactorily. The plant has Six medium-speed generator units, each with an installed capacity of 12,500kW (total capacity of 75MW) but an effective capacity of 10,460Kw. However, one of this engine units has undergone total failure and thus declared obsolete. This left the station running on an effective capacity of about 52.3MW. Other main arrangements of the plant are Fuel storage tanks, water cooling towers, air and gas emission equipment, waste fuel treatment facility, fire prevention equipment, substation facilities, main transformers, extension, and connection of existing 132kW switchgear The station having been commissioned in 1999 is a facility run by KENGEN. The output of Kipevu I declined for a period due to a breakdown of one of the generators and other technical troubles. However, the subsequent establishment of a framework for technical cooperation with the supplier and its effective implementation resulted in strengthening the KenGen's management capability in operation, maintenance, and management. Self-efforts of the executing agency of the project together with the effective support of the supplier side considerably enhance the sustainability of the generation business. (Masami.S, 2005).

1.3: Problem Statement

Exhaust gases leaving internal combustion chambers of I.C engines are at very high temperatures approximating to about 450-600°C.These gases have high heat content, carried away as exhaust heat emissions. These waste gases carrying such high contents of heat are released to the environment only to harmful disposal. The recovery and utilization of the exhaust heat will not only increase capacity of power generation but also improve combustion process efficiency as well as ensuring reduced pollution. Furthermore, cogeneration in diesel plants will help lower the unit power cost which is currently very high. Employing the topping cycle, heat is produced when fuel is used to generate electricity which is then recovered. The recovered waste heat is thus passed through a series of Heat Recovery Steam Generators (HRSGs) to generate steam which is utilized to run steam turbines for power regeneration(Kabeyi & Oludolapo, 2020a, 2020b; Riley et al., 2020).

1.4 Justification of the Study

In view of the diminishing potential for the future development of hydroelectric power generation, geothermal electric power generation takes time and cost. Moreover, renewable energy sources in generating electricity, such as biomass, solar power, and wind power, have certain limitation in generating capacity. Therefore, diesel thermal power generation, which has a relatively low impact on the environment, holds high importance as a power source to complement hydro-power and geothermal power generation. Furthermore, diesel-powered generators are relatively easy to operate, as it can be started and stopped in a short time. Besides, there are several technical merits by installing of several small-scale generators rather than a single unit, such as undertaking repair and maintenance without interruption of the plant operation, sharing spare parts among the units, and using the parts from a generator

undergoing maintenance temporarily for a generator requiring parts in the event of an emergency. In view of these merits, the project's relevance remains high(Kabeyi & Oludolapo, 2020d; Oludolapo & Kabeyi, 2020).

Diesel power plants are easy to design and install and they require fewer capital costs. Diesel plants also have low stand-by losses; operate at high efficiencies of energy conversion from fuel to electricity. These reasons make diesel power plants valuable and therefore despite the high-power costs associated with them, they cannot be completely done away with. This necessitates a solution through development of a model diesel engine cogeneration plant that will help in curbing the high electricity costs. Moreover, thermal power stations remain the most reliable sources of standby power at peak demands and therefore cogeneration will help boost the plant capacity as well as reliability(Kabeyi & Oludolapo, 2020b, 2021).

2.0 LITERATURE REVIEW

The American Society of Heating, Refrigerating, and Air-Conditioning Engineers (ASHRAE) defines cogeneration as "the simultaneous production of electrical or mechanical energy (power) and useful thermal energy from a single energy stream, such as oil, coal, natural or liquefied gas, biomass, or solar." (ASHRAE, 1996)Most often cogeneration systems use an engine to produce both mechanical and thermal power. The mechanical power is often utilized to produce electric power using a generator; it can also be used to drive compressors or pumps. The thermal power can be used directly for heating or indirectly for cooling (with absorption chilling)(Jaccard, 2007). A related term, "Combined Heat and Power" (CHP), refers to the production and use of heat and power from the same source.

2.1: Bucknell Cogeneration Facility (Bucknell, 1996)

Bucknell University was founded in 1846 on the banks of the West Branch of the Susquehanna River. It was originally named the University of Lewisburg but was renamed in 1886 by its benefactor, William Bucknell, a Philadelphian who supported the University after the Civil War. The first utility plant was constructed in the early 1900's to supply steam from a coal-fired boiler. Bucknell replaced the original steam plant in 1949 with a new, much larger coal-fired plant. As the campus grew, the coal fired plant struggled to provide sufficient steam flow during peak usage periods. In addition, it became increasingly difficult to abide with the more stringent environmental regulations. The reliability of the plant also began to deteriorate due to aging equipment and systems. In 1996 these three concerns prompted Bucknell to replace the coal plant with a new combined heating and power (CHP) system. The new plant was designed with the intent of satisfying the campus' steam and electrical load for the next 20 years while improving emissions and energy efficiency in a cost-effective manner. The CHP facility was completed in 1998 and had an immediate effect. Bucknell saw a reduction in emissions and energy costs. The CHP facility saved Bucknell $1.2 million annually over the past ten years, while reducing greenhouse gas emissions by 50% compared to the coal-fired plant.

2.2: Waste heat recovery and utilization (Liquefied Natural gas fueled combined cycle system, 2007)

This paper proposed an improved Liquefied Natural Gas (LNG), fuelled combined cycle power plant with a waste heat recovery and utilization system. The proposed combined cycle, which provide power output and thermal energy, consist of gas/steam combined cycle, the subsystem utilization of the latent heat of spent steam from the steam turbine to vaporize LNG, the sub system that recovers both the sensible heat and latent heat of water vapour in the exhaust gas from heat recovery steam generator (HRSG), and the HRSG waste heat utilization sub system.

The conventional combined cycle and proposed combined cycle are modeled, considering mass, energy, and exergy balances for every component and both energy and exergy analysis are conducted. Parametric analyses are performed for the proposed combined cycle to evaluate the effect of several factors, such as the gas turbine temperature, the condenser pressure, the pinch point temperature difference of the condensing heat exchanger and fuel gas heating temperature on the performance of the proposed combined cycle through simulation calculation. The results show that the electrical efficiency and the exergy efficiency of proposed combined cycle can be increased by 1.6% and 2.84% than those of the conventional combined cycle, respectively. The heat recovery per kg of flue gas is equal to 86.27 kJ/sec. one MW of electric power for operating sea water pumps can be saved. The net electric efficiency and heat recovery ratio increase as the condenser pressure decreases.

2.3: Parametric design and cost of heat recovery regenerators (Yongjun, October 2003)

The objective of this paper was to parametrically investigate the design and cost of HRSG system and to demonstrate impact on the overall cost of electricity (COE) of a combined cycle power plant. There are numerous design parameters that can affect the size and complexity of the HRSG. It is the plan for the project to identity all the important parameters

and to evaluate each. The exhaust gas pressure drop across the HRSG is chosen for evaluation. This parameter affects the performance of both the gas turbine and steam turbine and size of HRSG.Single pressure, two pressure, and their pressure. HRSG are investigation with the tradeoffs between design point size, performance and cost evaluated for each system. A genetic algorithm is used in the design optimization process to minimize the investment cost of the HRSG. Second system level metrics are employed to evaluate a design. They are gas turbine net power, steam turbine net power, fuel consumption of the power plant, net cycle efficiency of the power plant, HRSG investment cost, total investment cost of the power plant and the operating cost measured by the cost of electricity (COE). The impacts of HRSG exhaust gas pressure drop and system complexity on these system level metrics are investigated.

2.4: Optimal Design Exchanger configuration for heat recovery (Srinivas, 2008)

In this paper the authors attempt to develop the optimum configuration for single pressure (SP), dual pressure (DP) and triple pressure (TP) heat steam generator (HRSG) to improve heat recovery and exergy efficiency of combined cycle. A de-aerator was added to enhance efficiency and remove dissolved gases in feed water. A new method was introduced to evaluate low pressure (LP) and intermediate pressure (IP) in HRSG from local flue gas temperature to get minimum possible temperature difference in heaters instead of a usual fixation of pressures. Optimum location for de-aerator was found at 1, 3, and 5 bar respectively for SP, DP, and TP in heat recovery at a high pressure (HP) of 200 bar.

It is concluded that optimum pressure ratio for compressor with SP, DP and TP effects in heat recovery are 8, 10 and 12 respectively at 12000 C of gas turbine inlet temperature optimum de-aerator pressure is obtained at1.3, and 5 bar for SP, DP, and TP levels respectively at steam turbine inlet pressure of 200 bar. Similarly, at 200 bar of HP pressure for DP and TP, steam reheated demands100 bar to maximize exergy efficiency for combustion chamber. Parametric analysis exhibits that gain in efficiency from single pressure heat recovery to DP and TP recovery increasing with diminishing rate.

3.0: METHODOLOGY

3.1: Overview of the system design

Designing a cogeneration plant requires selection of the most economic combination of equipment from among the many options available (Jeremiahi, 2019; Moses, 2019). The technology is usually chosen based on the energy forms required by the user and may include a conventional boiler, the prime mover, heat regenerators and combustion turbines(Rettig et al., 2011). Two technical factors that play an important role in determining the plant configuration are the available fuel and the ratio of heat demand to power demand. Figure 1 below shows the proposed structure of the cogeneration plant(Barasa, 2018). Figure 1 below demonstrates the proposed configuration of the cogeneration plant.

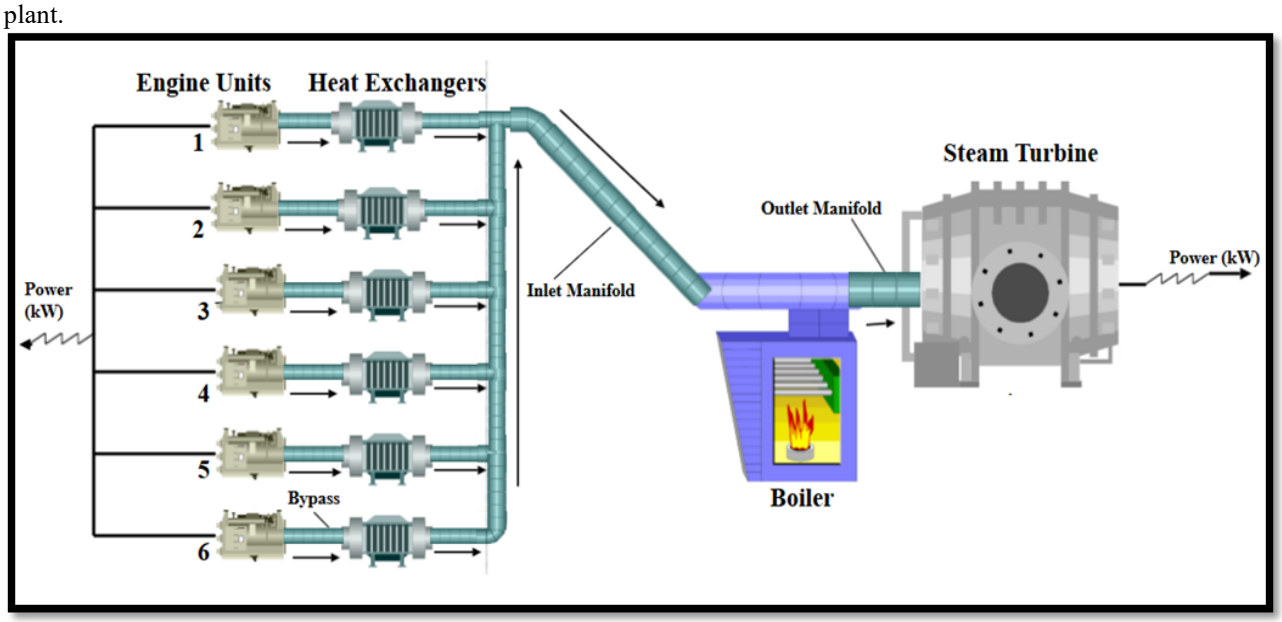

Figure1: The system proposed design overview. (Author's proposition)

Figure 1 shows the main elements of the proposed system being exhaust system from the six engines connected to a common duct that leads the combined exhaust to an exhaust gas boiler.

3.2: Procedure

- Analyze the quantity of heat lost through exhaust gases at the appropriate points.
- Identify the appropriate interfaces and interconnections as follows.
  - i.) Heat regenerator (interface I)
  - ii.) Exhaust Gas Boiler (interface II)
  - iii.) Steam Turbine (Interface III)
  - iv.) Steam Turbine Generator (STG)
  - v.) All appropriate sizes and types of piping systems
  - vi.) All flow points of water, exhaust gases, steam, and power
- Design, specify and select appropriately each of the required interface and interconnections.
- Observe all necessary design considerations providing the appropriate allowances for optimum conditions.

4.0: RESULTS AND DISCUSSION

Table 1 below is the summary of the engine specifications.

Table 1: Kipevu I Engine specifications (Author's summary).

PARAMETER	QUANTITY/TYPE
Engine Manufacturer	MAN - B & W
Engine capacity	10460kW
Type of the Engines installed	9 cylinder-inline-4 strokes
No. of Cylinders (n)	9
Bore diameter (d)	580mm
Stroke Length (L)	640mm
Engine Speed (N)	428 RPM
Compression ratio (r)	13.2
Specific Fuel Consumption	0.178kg/kWh
Swept volume capacity	1521800cc
Ignition Pressure (IP)	23.1 bar
Compression pressure	135 bars
Mean Piston Speed	9.1m/s
Sense of rotation	Anticlockwise
Cooling system	Water cooled
Mean Torque (T)-Calculated	233.37kNm

From table one, it is noted that the engines 9-cylinder inline engines operating at a synchronous speed of 428 rpm.

i.) Indicated power.

$$\text{I.P} = \frac{\text{Pme x L x A x N x k}}{60\times 2} = 12{,}538.4212kW$$

ii.) Brake power (B.P)

$$B.P = \frac{2\Pi NT}{60} = 10459.46kW$$

iii.) Mechanical efficiency

$$\eta m = \frac{B.P}{I.P} \times 100\% = 83.4\%$$

Mass flow rate of the exhaust gases,

$$m_e = mf + ma = 0.5172 + 5.7 = 6.2172kg/s$$

iv.) Heat loss by exhaust gases.

$$Q_e = m_e \times Cp \times \blacktriangle T$$
$$= m_e \times Cp \times (Tsource - Tsink)$$
$$= 6.2172\ kg/s \times 1.008\ KJ/kgK \times (310 - 170)\ ^0C$$
$$= 1040.3116Kw$$

4.1: The Heat Exchanger Design

Figure 2 shows the design overview of a counterflow heat exchanger.

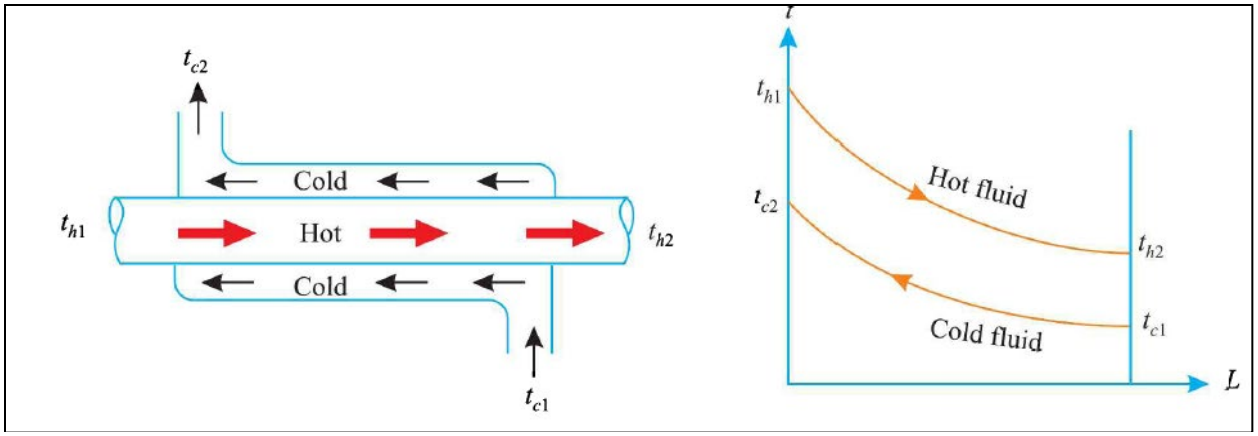

Figure 2: Exchanger flow arrangement (Author's conception)

Figure 2 shows a counterflow heat exchanger design to be used in the design of the cogeneration lant exhaust gas boiler and superheater tubes. The flue gases and the water/steam in tubes flow in opposite directions, hence counter flow heat exchangers. t_{c2} and t_{c1} are the outlet and inlet flue gas temperatures while t_{h1} and t_{h2} is the temperature of water at inlet and outlet. The flue gas occupies the shell side while water occupy or flows in tubes.

Heat transfer area and number of tubes

i.) U-tube construction exchanger
ii.) 1-shell and 2-tube pass heat exchanger ($N_p = 2$)
iii.) Outer tube diameter($d_o = 25.4mm(1\ in)$,
iv.) tube thickness $t_o = 2.108mm$ (0.083in)
v.) Inner tube diameter $d_i = 21.184mm$ (0.834in)

vi.) Pitch $P_t = 1.25d_o = 1.25 \times 2.54 = 31.75mm$, square pitch layout
vii.) Let length of tubes (L_t) be 4.0m

Figure 3 below shows the proposed assembly of the shell and tubes with baffle plates in the proposed heat exchanger assembly.

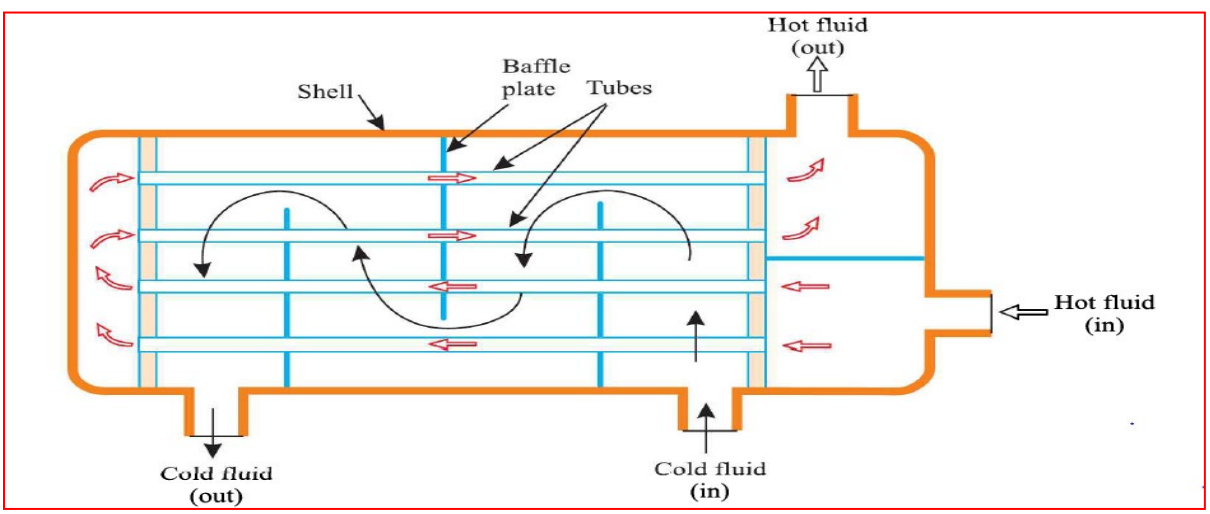

Figure 3: Heat exchanger flow arrangement (Author's design)

From figure 3, it is noted that the main parts of the heat exchanger for exhaust heat recovery are the shell, tubes, and baffles which must be designed for size, strength and materials.

$$A = \frac{\dot{m}_e C_{Pe}(\text{Tei} - \text{Teo})}{U_o \Delta T_{lm} F_T} = \frac{6.2127 \times 1.0295 \times 10^3 (310 - 170)}{60 \times 175.498 \times 0.95} = 89.513m^2$$

Shell diameter, Ds

For the 1-shell and 2-pass heat exchanger, for number of tubes being 280, the minimum recommended shell diameter is 84 inches.

$$Ds = 84inches = 84 \times 25.4mm = 2133.6mm$$

Baffle spacing and baffle plates design.

According to TEMA Standards, the recommended baffle spacing is [0.4*Ds to* 0.6 *Ds]*

$$Baffle\ spacing = 0.5D_s = 0.5 \times 2133.6mm = 1066.8mm$$

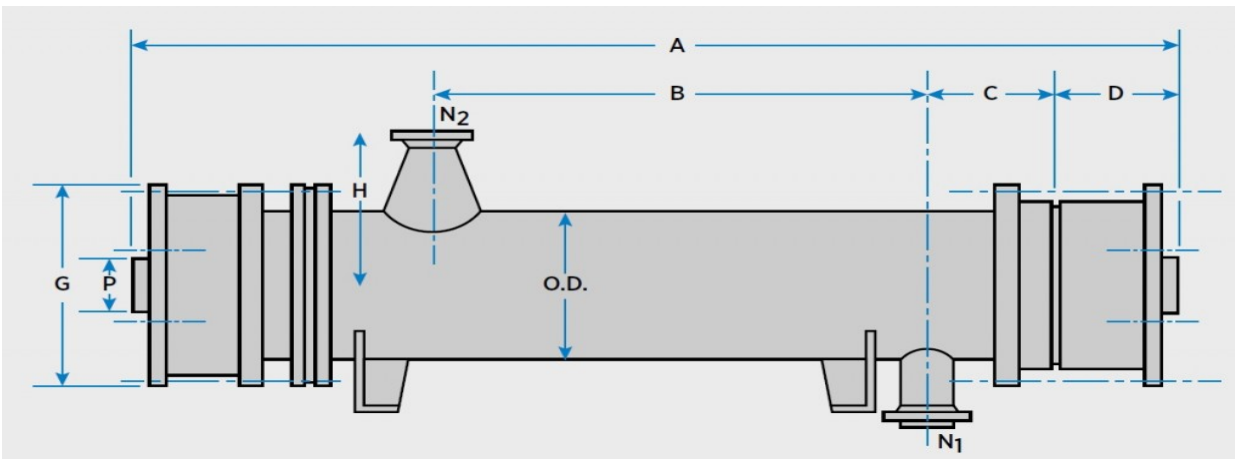

Figure 4: Heat exchanger configuration plan view (Author's sketch).

Figure 4 shows the overall dimensions for the proposed shell tube heat exchanger assemble where OD is outer diameter, A is overall length and B is the spacing between the two axes of the coolant inlet and outlet .

Shell thickness

$$t_s = \frac{PR_s}{\sigma j - 0.6P} + Corrosion\ allowance;\ j\ is\ efficiency\ of\ the\ joint$$

$$t_s = 2.9385mm + 1.5mm$$

=4.4385mm

Figure 5 below is an illustration of the proposed heat exchanger assembly.

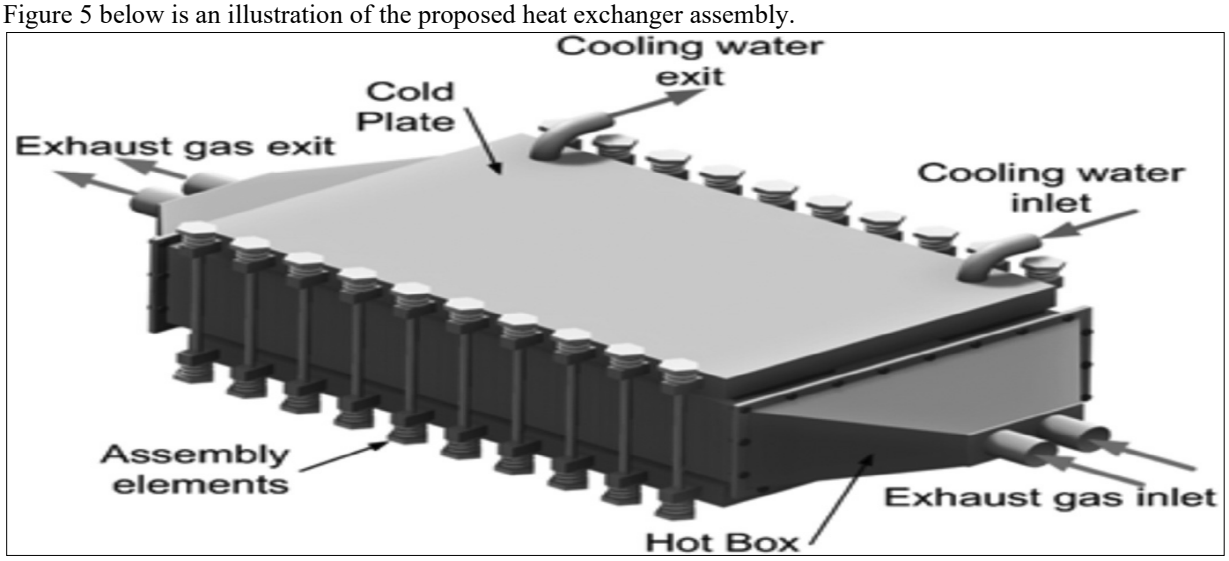

Figure 5: Exchanger components (Author's illustration)

Figure 5 is a 3D illustration of the heat exchanger assembly. The main elements being exhaust gas inlet and outlet, assemble elements, water coolant inlet and outlet for the proposed development.

4.2: The Exhaust Gas Boiler

- Pipe Grade: ANSI SCH 40
- Boiler cylinder volume 729L
- Pipe Size: NPSI ¼
- Desired Steam pressure :40bar
- Desired flow rate of steam $v = 0.00987m^3/s$
- Density of steam,ρ steam =$2.25kg/m^3$
- Mass flow rate of steam ,m= $v\times$ ρ steam

$$= 0.00987m^3/s \times 2.25kg/m^3$$
$$=0.0222075kg/s$$
$$=79.947kg/hr$$

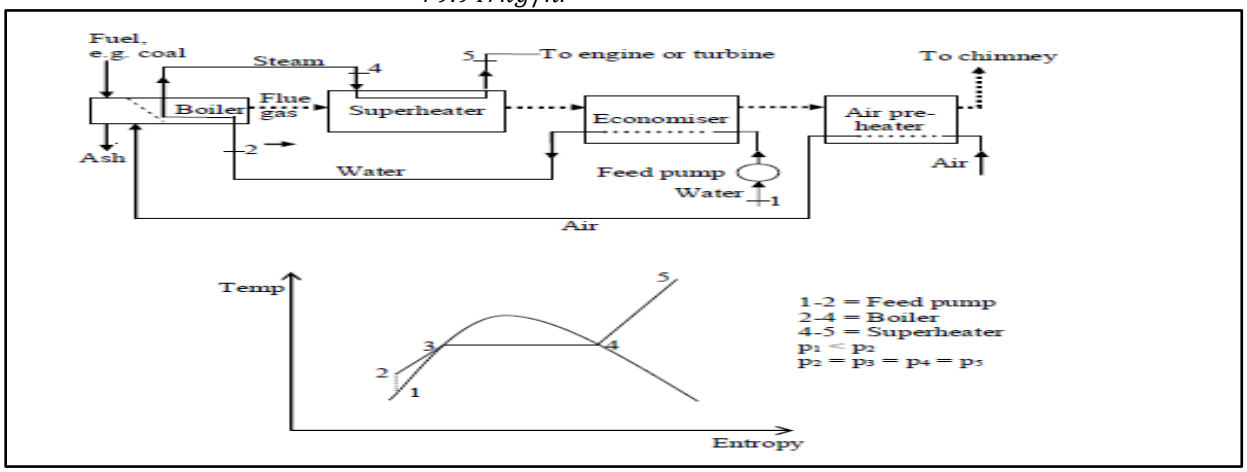

Figure 6: Exhaust gas boiler components (Author's work)

Figure 6 shows the Rankine cycle on a TS diagram for the proposed cogeneration powerplant. It shows that steam is superheated after generation in the exhaust gas oiler.

4.3: The Steam turbine

The specifications of proposed steam turbine are.

i.) Steam velocity exiting the nozzle=300,000 rpm
ii.) Tangential component of velocity out of nozzle is twice the blade speed.
iii.) Tangential component of absolute velocity out of rotor is zero,
iv.) High head of about 120m since it's an impulse turbine.
v.) Mass flow rate of stream, 1kg/s (unit)

$$U = \omega Rm$$

$$\frac{300{,}000 \times 2\Pi \times \frac{0.42672 + 0.33858}{2})}{60} = 120.213\text{m/s}$$

The turbine rotor is the moving part of the steam turbine. Figure 7 belw illustrates the steam turbine rotor assemble

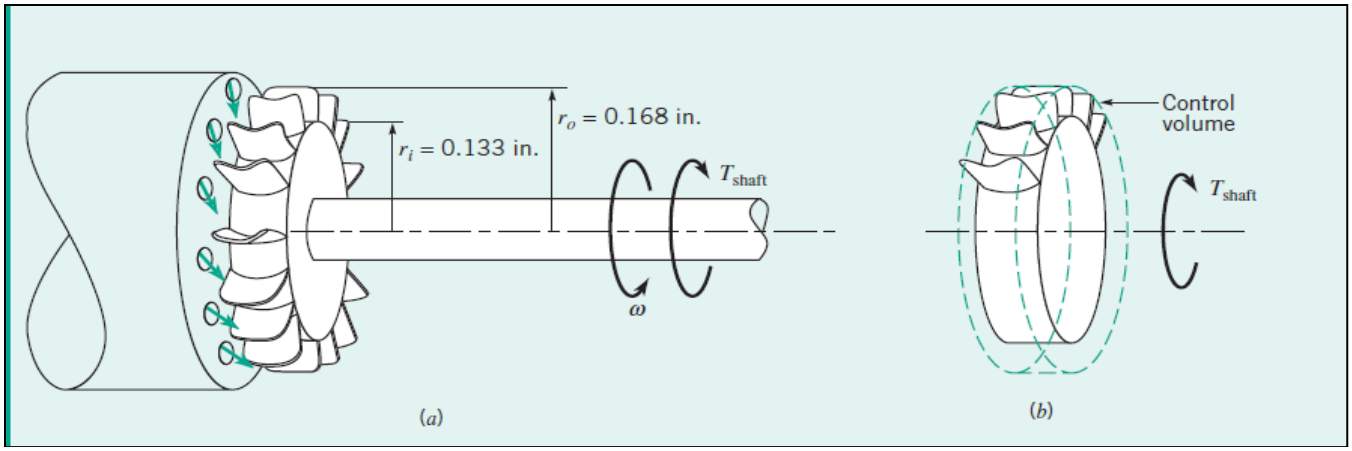

Figure 7: Steam turbine rotor orientation

Figure 7 shows the overall dimensions of the turbine rotor shaft assembly where r_o is the overall radius over the turbine blade tips.

Steam turbine selection Criteria

Table 2: Summary of our selected Steam Turbine Attributes for CHP

Size range	From the available wattage ratings, our STG will expend a capacity of 10MW.
Thermal output	This being a CHP configuration, it shall use backpressure or (extraction steam) turbines to generate power and thermal energy. Backpressure steam turbines produce low pressure steam while extraction turbines deliver both low pressure and medium pressure steam.
Part-load operation	Steam turbines have relatively good part-load performance, but efficiency does decline as power output is reduced.
Fuel	A steam boiler shall be used to generate steam required for the steam turbine generator. Our boiler will utilize industrial HFO as the main source of fuel.
Reliability	Steam turbines are a mature technology with excellent durability and reliability.
Other	Steam turbines are typically designed to deliver relatively large amounts of thermal energy with electricity generated as a by-product of heat generation. Overall CHP efficiencies can reach or exceed 80%.

From table 2, it is noted that the desirable characteristics of an appropriate cogeneration turbine is an extraction turbine, good part load characteristics and capable of realizing up to 80% overall plant thermal efficiency.

4.4: The Steam Turbo-generator selection

The specifications of proposed turbine are summarized in table 3 below.

Table 3: Turbine specifications

Type	SST-200, Single-casing, geared
Application	Industrial use
Model	Multivalve Multistage (MVMS)
Turbine design	Extraction-backpressure
Generator type	Synchronous
Power output	Up to 10 MW
Inlet pressure	Up to 110bar
Inlet Temperature	Up to 520°C
Exhaust pressure(condensing)	Up to 0.25 bar
Exhaust area	0.17 – 0.34m²

From table 3, it is noted that a multistage turbine is proposed for the powerplant cogeneration project with design capacity of 10 MW.

4.5. Limitations of the Design

i.) Operation at part loads

Diesel Engine power plants are not reliable base load power sources, i.e., they cannot give consistent power ratings due to load variations and the big depreciation factor. However, these Engines are highly reliable sources of standby power. This therefore means that the boiler efficiency is compromised at part loads and thus the whole system is brought low. This also means that this is an in dispatchable power source, i.e., it cannot meet all fluctuating needs of power. To this effect governing in steam turbines is introduced to help maintain the rotational speeds at constant even at part load s(Biachi, 2015; Kabeyi & Oludolapo, 2020c; Wang, Li, Wang, & Bu, 2015).

ii.) Thermodynamic limitations

In this design, thermal fluctuations are at par neglected with the assumption that thermodynamic quantities such as pressure and energy are functions of thermodynamic variables such as temperature and density, this negligence is hereby justified to an allowable extend(Kabeyi, 2020b). Therefore, it has been identified that there is large potential of energy savings from diesel engine power plants and to this effect Kipevu I can be able to recover about 5.2MW of power from the flue gases according to our design analysis. The recovering and utilization of the waste gases help to improve performance and enhance low emissions of the Engines. The waste heat recovery from exhaust gases and its conversion into mechanical shaft power then to electrical energy through a turbogenerator is highly achievable with the thermodynamic Rankine cycle.

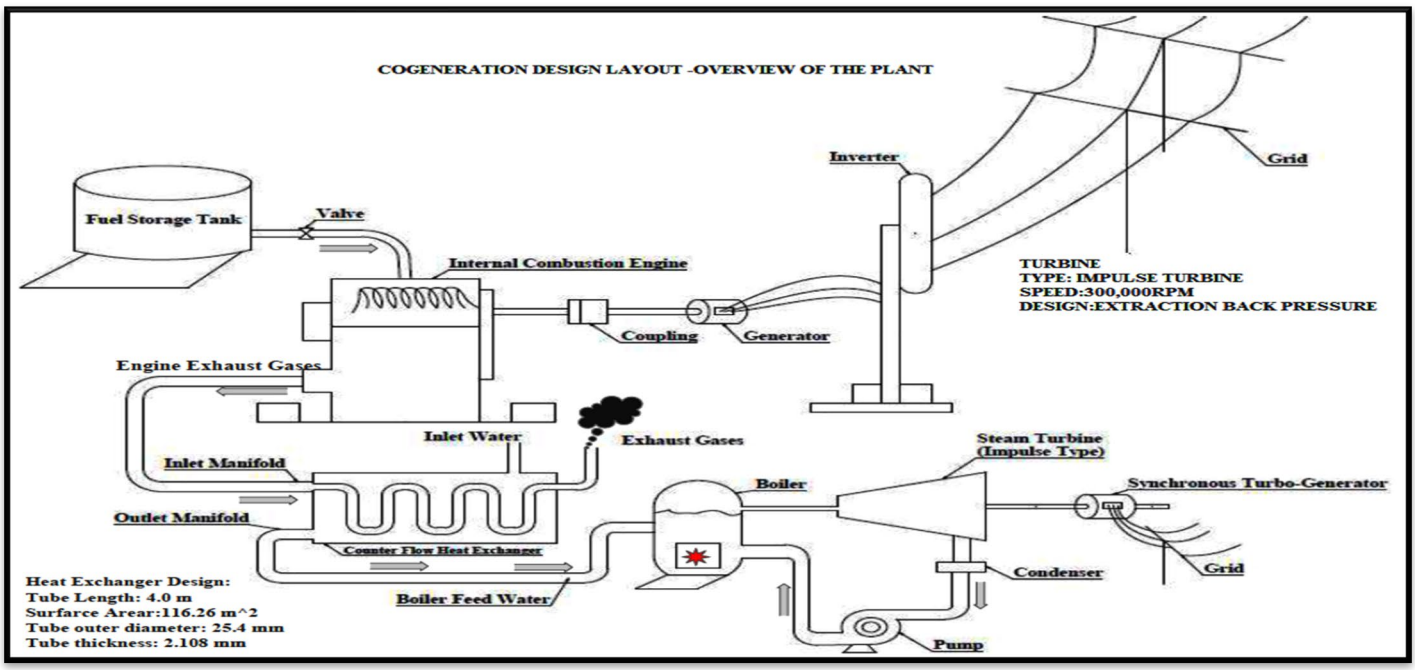

Figure 8: Overall plant configuration (Author's conception)

Figure 8 shows the overall model of the modified powerplant which includes the proposed cogeneration plant. The main elements of the overall diesel powerplant with cogeneration plant are the engines, generators for engine, generator for the turbine, exhaust gas boiler, fuel storage tanks, boiler feed water pumps, and the steam turbine.

Various design criteria are proposed for the design of the major element of the proposed cogeneration/dual cycle powerplant. These elements are the heat exchangers, exhaust gas boiler, steam turbine, the turbogenerator as well as several accessories for the plant(Milkov, Evtimov, & Punov, 2012; Oludolapo & Kabeyi, 2020; Wilson et al., 2017). This is summarized in table 4 below.

Table 4: Model cogeneration plant layout (Milkov et al., 2012)

Cogeneration System Components	Specifications	Estimated Amount

1.Heat Exchanger	• Counter flow • 280 tubes ,2-tube pass, t=0.083in, di=0.834in • Tube length=4.0m, square pitch layout • Maximum Design velocity=0.820648m/s • Baffle spacing=533.4mm • Shell thickness=5.0mm • Pressure drop=2.109kPa • Mass flow rate =2.83kg/s • Exchanger area=89 sq. m	KSH.1.2M
2.Exhaust Gas Boiler	• Boiler cylinder volume = 792L • Thickness=0.423cm • Pipe grade SCH 40 • Pipe Size NPSI ¼ • Steam pressure =40bar • Steam velocity =120.213m/s • Provision for; Economizer, Superheater, Preheater, and feed pump	KSH.2.5M
3. Steam Turbine	• Rotor Speed =30,000 rpm • Rotor type = Pelton, single casing geared • Steam pressure = 40 bar • Model = multistage multi valve • Design = extraction back pressure	KSH. 12M
4.Generatror	• Power output= up to 10MW • Type-Synchronous	Ksh.0.8m
5.Other interconnections	• Feed hose, bolts, nuts, pressure gauges, valves etc.	KSH. 0.6m
Total cost=ksh.20m		
Cost of unit of power at ksh.7.00 per kwh		
Payback period=1year		

From table 4, it can be noted that the main elements of the proposed design are the heat exchanger, turbogenerator, steam turbine and exhaust gas boiler. Each has unique important parameters like power output, type of turbine and exhaust pressure for the generator. Important parameters for the steam turbine are rotor speed, inlet pressure, and rotor type.

6.0. CONCLUSION

It has been identified that there is huge potential of energy savings using waste heat recovery technologies. Waste heat recovery defines capturing and reusing the waste heat from internal combustion engine for heating, generating mechanical or electrical work and refrigeration system. Waste engine heat can be recovered from the cooling and exhaust systems using the Rankine or organic Rankine cycles and used to generate extra power as well as process heat. If these technologies were adopted by the diesel powerplants, then it will be result in efficient engine performance and Low emission. The waste heat recovery from exhaust gas and conversion into mechanical power is possible with the help of the Rankine cycles. Kipevu I diesel power plant has the potential to generate about site for recovery and utilization of this waste heat with a possible capacity of 5.2MW of power. The p5.2 MW extra power from the exhaust heat recovery system with a Rankine cycle turbine plant in addition to the existing 60 MW diesel

engine plants. The cogeneration system requires the design, sizing, and careful selection of the heat regenerators. The exhaust gas boiler, the steam turbine, and the turbogenerator.

7.0. RECOMMENDATIONS

Diesel power plants to adopt cogeneration as a method of boosting capacity for the stations and reducing environmental impact from diesel power plants. Since CHP is well justified to save energy and emissions as well as to utilize energy in an effective and sustainable way, we recommend that, thermal power plants in Kenya to adopt cogeneration.

Suggestions for further research work

i.) This study recommends further research on modification of Kipevu 1 Engines to make them dual fuel i.e., to use Gaseous fuels and industrial diesel.

ii.) Another study is recommended to study the feasibility of an organic Rankine powerplant for Kipevu 1 60 MW diesel engine plant.

References

ASHRAE. (1996). HVAC systems and equipment. In (pp. chapter 7).

Barasa, M. J. K. (2018). Transformational Vs Transactional Leadership with Examples. *International Journal of Business & Management, 6*(5), 191-193. . Retrieved from http://www.internationaljournalcorner.com/index.php/theijbm/article/view/129786/90079

Biachi, C. (2015). *Exhaust Waste Heat Recovery in Internal Combustion Engines.* (PhD). Libreria Universitaria Benedett, Italy. Retrieved from https://www.researchgate.net/publication/280488608Exhaust_Waste_Heat_Recovery_in_Internal_Combustion_Engines?channel=

Bucknell. (1996). *Bucknell handbook*. Retrieved from

Jaccard, M. (2007). Fossil fuels and clean, plentiful energy in the 21st century: The example of coal. *EIB Papers, 12*(1), 80-104. Retrieved from https://www.econstor.eu/bitstream/10419/44884/1/539673242.pdf

Jeremiahi, M. B. K. (2019). Evolution of Project Management, Monitoring and Evaluation, with Historical Events and Projects that Have Shaped the Development of Project Management as a Profession. *International Journal of Science and Research (IJSR), 8* (12). doi:10.21275/ART20202078

Kabeyi, M. J. B. (2020a). Feasibility of Wellhead Technology Power Plants for Electricity Generation. *International Journal of Computer Engineering in Research Trends, 7*(2), 1-16. doi:https://doi.org/10.22362/ijcert/2020/v7/i02/v7i0201

Kabeyi, M. J. B. (2020b). Investigating the challenges of bagasse cogeneration in the kenyan Sugar Industry. *International Journal of Engineering Sciences & Research Technology, 9*(5), 7-64. doi:https://doi.org/10.5281/zenodo.3828855

Kabeyi, M. J. B., & Oludolapo, A. O. (2020a). *Design and Modelling of a Waste Heat Recovery System for a 250KW Diesel Engine for Cereal Drying*. Paper presented at the 2nd African International Conference on Industrial Engineering and Operations Management, Harare, Zimbabwe. http://www.ieomsociety.org/harare2020/papers/78.pdf

Kabeyi, M. J. B., & Oludolapo, A. O. (2020b). *Managing Sustainability in Electricity Generation*. Paper presented at the 2020 IEEE International Conference on Industrial Engineering and Engineering Management, Singapore, Singapore. https://ieeexplore.ieee.org/document/9309994

Kabeyi, M. J. B., & Oludolapo, A. O. (2020c). *Performance Analysis of an Open Cycle Gas Turbine Power Plant in Grid Electricity Generation*. Paper presented at the 2020 IEEE International Conference on Industrial Engineering and Engineering Management (IEEM), Singapore, Singapore. https://ieeexplore.ieee.org/stamp/stamp.jsp?tp=&arnumber=9309840

Kabeyi, M. J. B., & Oludolapo, A. O. (2020d, 5th – 7th October 2020). *Performance analysis of diesel engine power plants for grid electricity supply.* Paper presented at the 31ST Annual Southern African Institution for Industrial Engineering Conference, South Africa.

Kabeyi, M. J. B., & Oludolapo, A. O. (2020e). *Viability of Wellhead Power Plants as substitutes of Permanent Power plants*. Paper presented at the 2nd African International Conference on Industrial Engineering and Operations Management, Harare, Zimbabwe. http://www.ieomsociety.org/harare2020/papers/77.pdf

Kabeyi, M. J. B., & Oludolapo, A. O. (2021). Central versus wellhead power plants in geothermal grid electricity generation. *Energy, Sustainability and Society 11*(7), 23. doi:ttps://doi.org/10.1186/s13705-021-00283-8

Liquefied Natural gas fueled combined cycle system. (2007). Retrieved from

Masami.S. (2005). *Mombasa Diesel Generating Power Plant Project*. Retrieved from

Milkov, N., Evtimov, T., & Punov, P. (2012, June 28-30, 2012). *Advanced Technologies for Waste Heat Recovery in Internal Combustion Engines.* Paper presented at the XLVII International Scientific Conference on Information, Communication and Energy Systems and Technologies, Veliko Tarnovo, Bulgaria

Moses, J. B. K. (2019). Project and Program Evaluation Consultancy With Terms of Reference, Challenges, Opportunities, and Recommendations. *International Journal of Scientific and Research Publications, 9*(12), 171-194. doi:http://dx.doi.org/10.29322/IJSRP.9.12.2019.p9622

Oludolapo, A. O., & Kabeyi, M. J. B. (2020). *Design and Modelling of a Waste Heat Recovery System for a 250KW Diesel Engine for Cereals Drying*. Paper presented at the 2nd African International Conference on Industrial Engineering and Operations Management Harare, Zimbabwe. http://www.ieomsociety.org/harare2020/papers/78.pdf

Rettig, L. L., Lagler, M., Lamare, T., Li, S., Mahadea, V., McCallion, S., & Chernushevich, J. (2011). *Application of Organic Rankine Cycles (ORC)*. Paper presented at the World Engineers Convention, Geneva. https://www.zhaw.ch/storage/engineering/institute-zentren/iefe/PDFs/orc-final-paper-wec2011-2011-07-30.pdf

Riley, D. M., Tian, J., Güngör-Demirci, G., Phelan, P., Villalobos, J. R., & Milcarek, R. J. (2020). Techno-Economic Assessment of CHP Systems in Wastewater Treatment Plants. *Environments, 7*(10), 74. Retrieved from https://www.mdpi.com/2076-3298/7/10/74

Srinivas. (2008). *optimum configuration for single pressure,duall pressure and tripple pressure heat generator*. Retrieved from

Wang, H., Li, H., Wang, L., & Bu, X. (2015). *Recovery of Waste Heat in Diesel Engine Coolant for Air Conditioning*. Paper presented at the Proceedings of the 2015 International Symposium on Energy Science and Chemical Engineering. https://www.atlantis-press.com/proceedings/isesce-15/25846101

Wilson, J. M. R., Singh, A. K., Singh, A. K., & Subramanian, L. R. J. (2017). Waste Heat Recovery from Diesel Engine. *Thermal Science, 21*(1B), 715-727. doi:10.2298/TSCI160426264W

Yongjun. (October 2003). *International Conference on the parametric design and cost of HRSG and general impact on the overall cost of electricity of a combined cycle power plant*.

Authors Biographies

Moses Jeremiah Barasa Kabeyi is currently pursuing his D.Eng. In Industrial Engineering in the Department of Industrial Engineering at Durban University of Technology. He earned his B.Eng. degree in Production Engineering and MSC in Mechanical and Production Engineering (Energy) from Moi University, in Kenya, MA in Project planning and Management from University of Nairobi, in Kenya and Diplomas in Project management, Business management and NGO management respectively from The Kenya Institute of Management. He has worked in various factories including sugar manufacturing at Nzoia Sugar Company Ltd, pulp and paper at Pan African Paper Mills EA Ltd, and power generation at the Kenya Electricity Generating Company (KenGen) in Kenya, in an industrial career of 16 years before moving into teaching. He has taught in various universities in Kenya including University of Nairobi, Technical University of Mombasa, and Egerton University and currently on study leave. His research interests are power generation, fuels and combustion, internal combustion engines and project management and sustainability. He is registered with the Engineers Board of Kenya (EBK) and Institution of Engineers of Kenya (IEK) and has published several journal papers.

Oludolapo Akanni Olanrewaju is currently a Senior Lecturer and Head of Department of Industrial Engineering, Durban University of Technology, South Africa. He earned his BSc in Electrical Electronics Engineering and MSc in Industrial Engineering from the University of Ibadan, Nigeria and his Doctorate in Industrial Engineering from the Tshwane University of Technology, South Africa. He has published journal and conference papers. His research interests are not limited to energy/greenhouse gas analysis/management, life cycle assessment, application of artificial intelligence techniques and 3D Modelling. He is an associate member of the Southern African Institute of Industrial Engineering (SAIIE) and NRF rated researcher in South Africa.