The Design Development of an Ergonomic Public Trash Bin for COVID-19 Medical Mask Waste

Stevie Joes, Caroline De Candra, Herwin Larsen, Dennis Marchello, Frans Jusuf Daywin, Lina Gozali, Lamto Widodo, Adianto, Ahmad, Lithrone Laricha Salomon, Agustinus Purna Irawan
Department of Industrial Engineering
Universitas Tarumanagara
Jakarta, Indonesia
carolinedecandra@gmail.com , herwin.545190017@stu.untar.ac.id ,
dennis.545190018@stu.untar.ac.id , stepiejoes@gmail.com

Abstract
This paper presents an earth-friendly design of trash bin during the COVID-19 pandemic and new normal. Medical masks are widely used to protect and prevent people from getting infected by the coronavirus (SARS-CoV-2). This situation also increases the medical masks waste that is not disposed of properly. A survey was conducted with 100 respondents that consisted of both males and females above 17 years old in Indonesia to perceive the public trash bin's needs. SPSS software was used to analyze these survey data to confirm the validity and reliability of the data. Also, the study of product planning and development and anthropology were used to design an ergonomic product. Moreover, this paper aims to design an eco-friendly trash bin that can manage the medical mask waste, maintain hygiene, and be used for the public during the COVID-19 pandemic.

Keywords
Trash bin, Medical Mask, Anthropology, Corona Virus.

1. Introduction
As the ratio of infected people keeps increasing, hygiene is an essential factor that people need to look for during the COVID-19 pandemic. Joko Widodo, as the President of Republic Indonesia and other ministries in Indonesia, especially the Ministry of Health, assists in socializing and reminding to follow 3M health protocols to keep the public's health and sanitation. The 3M stands for "*menggunakan masker"* (wearing a mask), *"mencuci tangan"* (washing hands), and *"menjaga jarak"* (social-distancing) (Raditya, 2020). World Health Organization identified as WHO and Indonesia government recommended using medical masks also known as surgical mask as this type of mask has a better filter than another type of mask. Medical masks are also intended to prevent infections and shed liquid droplets and aerosol from the mouth and nose (Dbouk & Drikakis, 2020). However, this medical mask is a one-time use mask where, after that, the mask can no longer be used and will end up as waste. Based on the 1945 Constitution of the Republic of Indonesia Number 18 of 2008, concerning Waste Management, it is written how to manage medical mask waste. There are several things to do, such as disinfection and changed medical shape masks waste. Public trash bins nowadays are not compatible with customer needs. Public trash bins' incompetence to maintain cleanliness has increased the public's demand to renew today's public trash bin. The public needs a trash bin that can manage medical masks waste, maintain hygiene, and also compatible with the COVID-19 pandemic and new normal situation. Therefore, this paper will present a new trash bin design that can be used to manage medical masks waste, eco-friendly, ergonomic, and maintain hygiene by providing hand-sanitizer during COVID-19 pandemic and new normal situation.

2. Literature Review

2.1 Marketing Research
American Marketing Association defines marketing research as a function that connects consumers, customers, society, and the public with marketers through information (Kurniawan, 2020). This information is also used to

evaluate, analyze, and improve information about market problems and opportunities. The marketing research aims to obtain accurate data to be processed into information that can assist marketers in making effective and efficient decisions. The results are also used to evaluate, monitor, and optimize marketing performance (Priharto, 2019). Three types of marketing research can be done based on acquiring marketing research goals: problem-solving research, controlling research, and planning research. Marketing research also researching the market to determine the right form of marketing for the business.

2.2 Market Research

Market research is used to determine the opportunities and problems in the market according to consumer preferences. Market research has four main objectives as follows: analyze the market, analyzing the market response to a product or a service, analyzing the effectiveness of advertising or promotion and the company, and develop a strategy (Doman,2002). It is essential to achieve the market research goal, a systematic procedure for conducting research is required. The following are several steps for conducting research, such as: defining research, develop a problem, determining research data, and data collection method that consists of interview, focus group, survey, observation, and experiment.

2.3 Validity and Reliability Data

A validity test is used to show the level of accuracy and the truth of the measuring instrument used in a study (Ghozali,2009). The factor validity test is done by correlating the factor score with the total factor score. Factor validity can be done if the item is arranged using more than one factor. This test is to know the correlation between item score with item total score followed by item validity. The validity test used a Pearson Correlation analysis to confirm the validity of the data. A reliability test is a test used to test whether the measuring instrument used is reliable (Triana & Widyarto, 2013). The reliability test used Cronbach's alpha analysis technique to measure the measuring instrument's consistency (Khumaedi, 2012). Research data considered reliable if it provides consistent results for the same measurement.

2.4 Analytical Hierarchy Process

The analytical hierarchy process is a method for solving complex untrusted situations into several components in a hierarchical arrangement and giving subjective values about each variable's relative importance (Mytholib & Febrina) to influence the situation's outcome. Pairwise comparisons can be obtained by actual or relative measurements of the degree of liking, importance, or feeling. Using the analytical hierarchy process method helps to get a ratio scale for difficult things to measure, such as opinions, feelings, behaviors, and beliefs.

2.5 Ergonomic and Anthropology

Etymologically, ergonomics comes from the Greek word "*Ergos*" which means work and "*Nomos*" which means law or rule (Iridiastadi & Yassierli, 2014). Through this definition, ergonomics can be defined as a multidisciplinary study with methods of information collection, data collection, data processing, and analysis of results about a person's capacity and abilities, which are then concluded to be applied in design. This design aims to increase its value that is useful to humans. While etymologically, anthropology is derived from the Greek word "*Antro,*" which means human, and "*Metri,*" which means size (Bridger,1995). Anthropology can be defined as a study that studies human body measurements such as height, weight, body position when standing, body position when stretching out your arms, length of palms, and so on to design sizes for each individual or group. Anthropometric data is data based on measurement results used for designing a piece of equipment. Anthropometric data is divided into 2: structural anthropometry or static and functional anthropometry or dynamic (Wijaya, Siboro, & Purbasari, 2016).

3. Methodology

3.1 Validity Data Test

It is essential to determine the data's validity; it is necessary to use a validity test with the Pearson Correlation method. The analysis was performed by correlating each item's score with the sum of all the total score items. The test was carried out with a 2-sided test and with a significance level of 0.05. If it is found that R count value ≥ R table value, then the data is determining to be valid. Based on the table R-value with N equal to 100 and a significance level of 0.05, it can be seen that the R table value is 0.195. Based on the calculation of data validity using the SPSS software, the calculated R-value is obtained, which can be seen in Table 1.

Table 1 Validity Test Using SPSS Software

Correlations

		Estetika	Kapasitas	Mudah	Tahan_Lama	Harga	Nyaman	Bersih_Terawat	Fungsional	Total
Estetika	Pearson Correlation	1	.233*	.266**	.170	.050	.246*	.100	.118	.635**
	Sig. (2-tailed)		.020	.008	.090	.622	.014	.320	.241	.000
	N	100	100	100	100	100	100	100	100	100
Kapasitas	Pearson Correlation	.233*	1	.151	.159	.097	.261**	.114	-.079	.541**
	Sig. (2-tailed)	.020		.133	.113	.335	.009	.259	.435	.000
	N	100	100	100	100	100	100	100	100	100
Mudah	Pearson Correlation	.266**	.151	1	.163	.079	.367**	.048	.278**	.606**
	Sig. (2-tailed)	.008	.133		.106	.437	.000	.636	.005	.000
	N	100	100	100	100	100	100	100	100	100
Tahan_Lama	Pearson Correlation	.170	.159	.163	1	-.105	.250*	.140	.141	.475**
	Sig. (2-tailed)	.090	.113	.106		.300	.012	.165	.162	.000
	N	100	100	100	100	100	100	100	100	100
Harga	Pearson Correlation	.050	.097	.079	-.105	1	-.046	-.005	.159	.291**
	Sig. (2-tailed)	.622	.335	.437	.300		.650	.960	.114	.003
	N	100	100	100	100	100	100	100	100	100
Nyaman	Pearson Correlation	.246*	.261**	.367**	.250*	-.046	1	.016	.303**	.614**
	Sig. (2-tailed)	.014	.009	.000	.012	.650		.876	.002	.000
	N	100	100	100	100	100	100	100	100	100
Bersih_Terawat	Pearson Correlation	.100	.114	.048	.140	-.005	.016	1	-.274**	.276**
	Sig. (2-tailed)	.320	.259	.636	.165	.960	.876		.006	.005
	N	100	100	100	100	100	100	100	100	100
Fungsional	Pearson Correlation	.118	-.079	.278**	.141	.159	.303**	-.274**	1	.388**
	Sig. (2-tailed)	.241	.435	.005	.162	.114	.002	.006		.000
	N	100	100	100	100	100	100	100	100	100
Total	Pearson Correlation	.635**	.541**	.606**	.475**	.291**	.614**	.276**	.388**	1
	Sig. (2-tailed)	.000	.000	.000	.000	.003	.000	.005	.000	
	N	100	100	100	100	100	100	100	100	100

*. Correlation is significant at the 0.05 level (2-tailed).

**. Correlation is significant at the 0.01 level (2-tailed).

Table 2 Validity Test

Variable	R Count	R Table	Result
Aesthetic	0.635	0.195	*Valid*
Storage Capacity	0.541	0.195	*Valid*
User Friendly	0.606	0.195	*Valid*
Durability	0.475	0.195	*Valid*
Affordable Price	0.291	0.195	*Valid*
Comfortable	0.614	0.195	*Valid*
Clean and Well-maintained	0.276	0.195	*Valid*
Functional	0.388	0.195	*Valid*

Validity test data with a sample of 100 respondents and the value from R table determined as 0.195. Obtained R count value for each variable ≥ R table, so it can be concluded that all data collected are valid.

3.2 Reliability Data Test

Reliability data used Alpha Cronbach formula to test and to make sure the data is reliable. The Cronbach's Alpha reliability test was carried out using a two-sided test with a significance level of 0.05. This test was conducted with SPSS software. Reliability test results can be seen in Table 3, Table 4, and Table 5.

Table 3 Case Processing Summary

Case Processing Summary

		N	%
Cases	Valid	100	100.0
	Excluded[a]	0	.0
	Total	100	100.0

Table 4 Reliability Statistics

Reliability Statistics

Cronbach's Alpha	N of Items
.696	9

Table 5 Item Total Statistics

Item-Total Statistics

	Scale Mean if Item Deleted	Scale Variance if Item Deleted	Corrected Item-Total Correlation	Cronbach's Alpha if Item Deleted
Estetika	67.61	15.513	.515	.647
Kapasitas	67.39	16.463	.425	.666
Mudah	67.34	16.429	.516	.658
Tahan_Lama	67.31	17.246	.379	.677
Harga	67.24	18.063	.182	.698
Nyaman	67.42	16.509	.529	.658
Bersih_Terawat	67.18	18.149	.169	.699
Fungsional	67.16	17.691	.290	.687
Total	35.91	4.770	1.000	.540

Based on the reliability testing results using the SPSS application, the Cronbach's Alpha value was 0.696. It is known that the R table value is 0.195, so it can be concluded that this test is reliable because of Cronbach's Alpha value > R table value.

3.3 Anthropology

The anthropometric data contained is used as a design consideration in determining product dimensions. These considerations and calculations aim to create comfortable use, safe to use, and ergonomic for the public as the users. The anthropometric data use for the design of "Public Trash Bin for medical mask" from over 17 years old of Indonesians male and female (www.Indonesia.org).

Table 6 Anthropology

Dimensi	Keterangan	5th	50th	95th	SD
D1	Tinggi tubuh	142.72	163.37	184.02	12.55
D2	Tinggi mata	138.63	153.46	168.29	9.02
D3	Tinggi bahu	123.29	136.77	150.25	8.2
D4	Tinggi siku	91.29	102.76	114.23	6.97
D5	Tinggi pinggul	85.95	94	102.06	4.9
D6	Tinggi tulang ruas	62.69	72.12	81.54	5.73
D7	Tinggi ujung jari	54.56	66.55	78.54	7.29
D8	Tinggi dalam posisi duduk	71.95	83.15	94.34	6.81
D9	Tinggi mata dalam posisi duduk	62.03	72.87	83.71	6.59
D10	Tinggi bahu dalam posisi duduk	48.99	60.14	71.3	6.78
D11	Tinggi siku dalam posisi duduk	16.4	28.2	40	7.17
D12	Tebal paha	6.48	16.83	27.18	6.29
D13	Panjang lutut	44.28	53.12	61.97	5.38
D14	Panjang popliteal	32.41	41.6	50.78	5.58
D15	Tinggi lutut	43.77	51.58	59.39	4.75
D16	Tinggi popliteal	36.14	42.5	48.86	3.87
D17	Lebar sisi bahu	32.57	42.08	51.59	5.78
D18	Lebar bahu bagian atas	28.38	36.23	44.07	4.77
D19	Lebar pinggul	26.59	35.07	43.55	5.15
D20	Tebal dada	11.11	20.84	30.56	5.91
D21	Tebal perut	12.74	22.27	31.8	5.79
D22	Panjang lengan atas	27.66	34.96	42.25	4.43
D23	Panjang lengan bawah	29.75	43.25	56.76	8.21
D24	Panjang rentang tangan ke depan	54.27	70.16	86.05	9.66
D25	Panjang bahu-genggaman tangan ke depan	48.63	59.62	70.6	6.68
D26	Panjang kepala	9.91	18.13	26.36	5
D27	Lebar kepala	12.8	16.53	20.26	2.27
D28	Panjang tangan	14.6	18.06	21.52	2.1
D29	Lebar tangan	5.42	10.44	15.47	3.05
D30	Panjang kaki	19.5	23.97	28.44	2.72
D31	Lebar kaki	6.24	9.29	12.34	1.85
D32	Panjang rentangan tangan ke samping	131.1	163.61	196.12	19.76
D33	Panjang rentangan siku	69.16	86.11	103.07	10.31
D34	Tinggi genggaman tangan ke atas dalam posisi berdiri	166.4	199.52	232.64	20.13
D35	Tinggi genggaman ke atas dalam posisi duduk	98.91	122.97	147.02	14.62
D36	Panjang genggaman tangan ke depan	49.59	68.12	86.65	11.27

Table 7 Foot Anthropology

No	Dimensi Tubuh	Pria			Wanita		
		Persentil (mm)			Persentil (mm)		
		P_5	P_{50}	P_{95}	P_5	P_{50}	P_{95}
1	Panjang Telapak Kaki	230	248	266	212	230	248
2	Panjang Telapak Lengan Kaki	165	178	191	158	171	184
3	Panjang Kaki sampai Jari Kelingking	186	201	216	178	191	204
4	Lebar Kaki	82	89	96	81	88	95
5	Lebar Tangkai Kaki	61	66	71	49	54	59
6	Tinggi Mata Kaki	61	66	71	59	64	69
7	Tinggi Bagian Tengah Kaki	68	75	82	64	69	74
8	Jarak Horizontal Tangkai Mata Kaki	49	52	55	46	49	52

Table 8 Hand Anthropology

No	Dimensi Tubuh	Pria			Wanita		
		Persentil (mm)			Persentil (mm)		
		P_5	P_{50}	P_{95}	P_5	P_{50}	P_{95}
1	Panjang Tangan	163	176	189	155	168	181
2	Panjang Telapak Tangan	92	100	108	87	94	101
3	Panjang Ibu Jari	45	48	51	42	45	48
4	Panjang Jari Telunjuk	62	67	72	60	65	70
5	Panjang Jari Tengah	70	77	84	69	74	79
6	Panjang Jari Manis	62	67	72	59	64	69
7	Panjang Jari Kelingking	48	51	54	45	48	51
8	Lebar Ibu Jari	19	21	23	16	18	20
9	Tebal Ibu Jari	19	21	23	15	17	19
10	Lebar Jari Telunjuk	18	20	22	15	17	19
11	Tebal Jari Telunjuk	16	18	20	13	15	17
12	Lebar Telapak Tangan (Metacarpal)	74	81	88	68	73	78
13	Lebar Telapak Tangan (Sampai Ibu Jari)	88	98	108	82	89	96
14	Lebar Telapak Tangan (Minimum)	68	75	82	64	59	74
15	Tebal Telapak Tangan (Metacarpal)	28	31	34	25	27	29
16	Tebal Telapak Tangan (Sampai Ibu Jari)	41	48	47	41	44	47
17	Diameter Genggam (Maksimum)	45	48	51	43	46	49
18	Lebar Maksimum (Ibu Jari ke Jari Kelingking)	177	192	206	169	184	199
19	Lebar Fungsional Maksimum (Ibu Jari ke Jari Lain)	122	132	142	113	123	134
20	Segi Empat Minimum yang dapat dilewati Telapak Tangan	57	62	67	51	56	61

Table 9 Product's Anthropology

No	Components	References	Percentile	Size (mm)	Tolerance (mm)	Result (mm)
1	Trash Bin Width	Length of the Female's Front Extend of the Arms	5%	560	-60	500
2	Trash Bin Height	Male's Elbow Height	5%	956	-56	900
3	Trash Bin Length	Length of the Female's Front Extend of the Arms	5%	560	-60	500
4	Storage Handle Position	Female's Hip Height	5%	836	-36	800
5	Storage Handle Diameter	Male's Palm Width	95%	88	2	90
6	Storage Handle Width	Thick Female's Palm	5%	25	-5	20
7	Puncher Length	"Sensi" Mask Length	-	170	30	200
8	Puncher Width	"Sensi" Mask Width	-	100	30	130
9	Pedal Length	Male's Foot Length	95%	133	-	133
10	Pedal Width	Male's Foot Width	95%	96	4	100
11	Pedal Position	Male's Ankle Height	95%	82	3	85
12	Tilt Position of Pedal	Dynamic working standing position	-	-	-	15^0
13	Hand-sanitizer Position	Female's Hip Height	5%	836	-36	800

4. Morphology

Concept morphology consists of several alternative choices, which will be combined into several product concepts.

Table 10 Concept Morphology

	Components	Aspects	Alternative 1	Alternative 2	Alternative 3
A	Trash Bin Shape	Shape	Horizontal cuboid	Cube	Triangular prism
B	Trash Bin Material	Material	Stainless Steel	ABS Plastic	Aluminum
C	Processing Way	Type	Shredder	Hole-puncher	Cutter
D	The Movement of the Trash Bin Lid	Type	Pull-down	Slide to left	Open up
E	Storage Capacity	Volume	80 Liter	120 Liter	90 Liter
F	Touchless system	Type	No-touch censor	1 Pedal	2 Pedal
G	Hand-sanitizer	Type	Sensor	Pump	Spray
H	Hand-sanitizer holder	Type	Sticked	Framework provided	Hanger provided

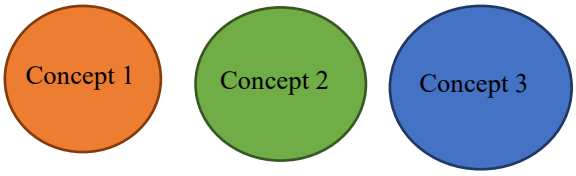

According to 3 available alternatives, 3 main concepts would be the final concept of "Medical Mask Waste Management Trash Bin for Public." These concepts are from several alternatives and options combined to produce a product that can fulfill the public's needs and wants for a public trash bin that is compatible during the COVID-19 pandemic and new normal life.

5. Final Concept

The product "Medical Mask Waste Management Trash Bin for Public" is designed to manage medical masks following the Indonesian government's recommendations that to throw away medical masks, it is essential to change masks' shape disinfected using a disinfectant. This design is done to prevent medical masks from being reused by irresponsible parties. This product also provides a hand sanitizer with the aim of this addition is to keep public hygiene. "Medical Mask Waste Management Trash Bin for Public" has 2 pedals to step on and to perform operations. The first pedal was used to treat medical mask waste by changing its shape using a puncher. The second pedal is used to tilt the trash bin's lid so that the treated medical mask can fall into the storage box. In the storage box, two disinfectants will disinfect the medical mask waste. These disinfectants are set with a timer to spray. The bottom of the product also uses a rubber tread that makes the product to be non-slip. The measurements in the design of " Medical Mask Waste Management Trash Bin for Public" are determined based on an ergonomic study and analysis, including anthropology. This final concept can be seen in the figure below.

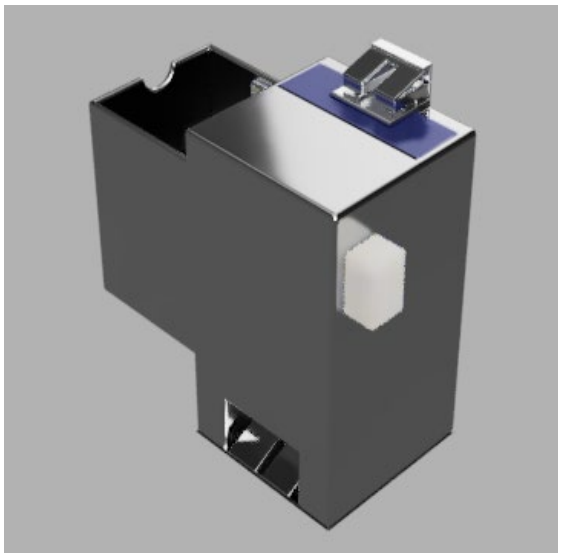

Figure 1 Final Concept

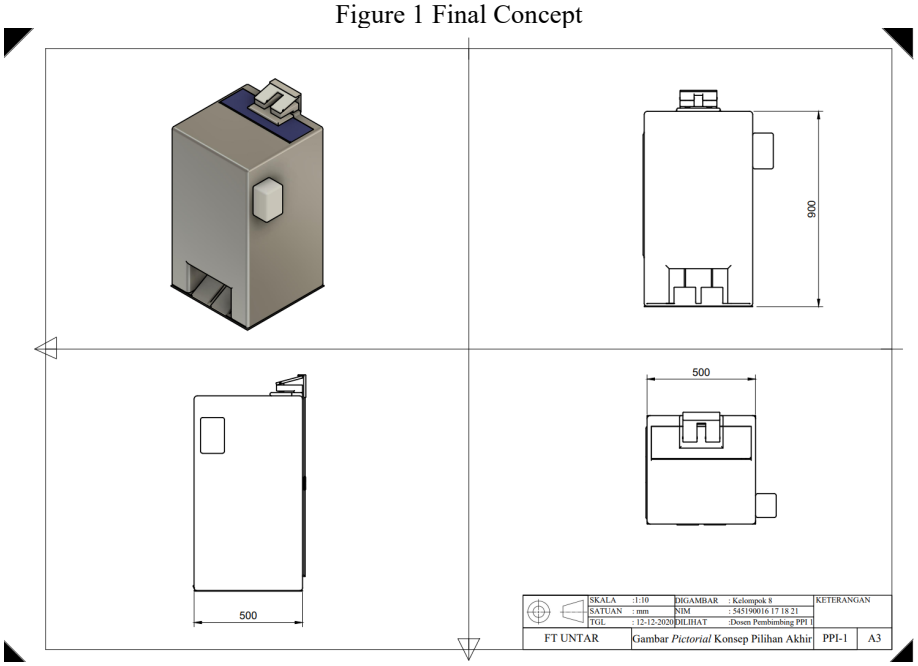

Figure 2 Description of Final Concept

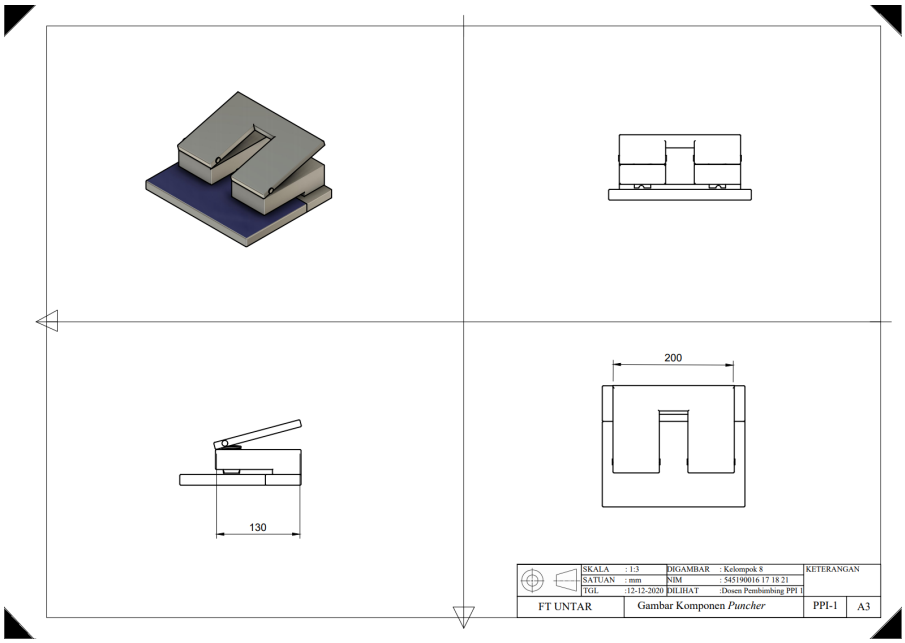

Figure 3 Puncher

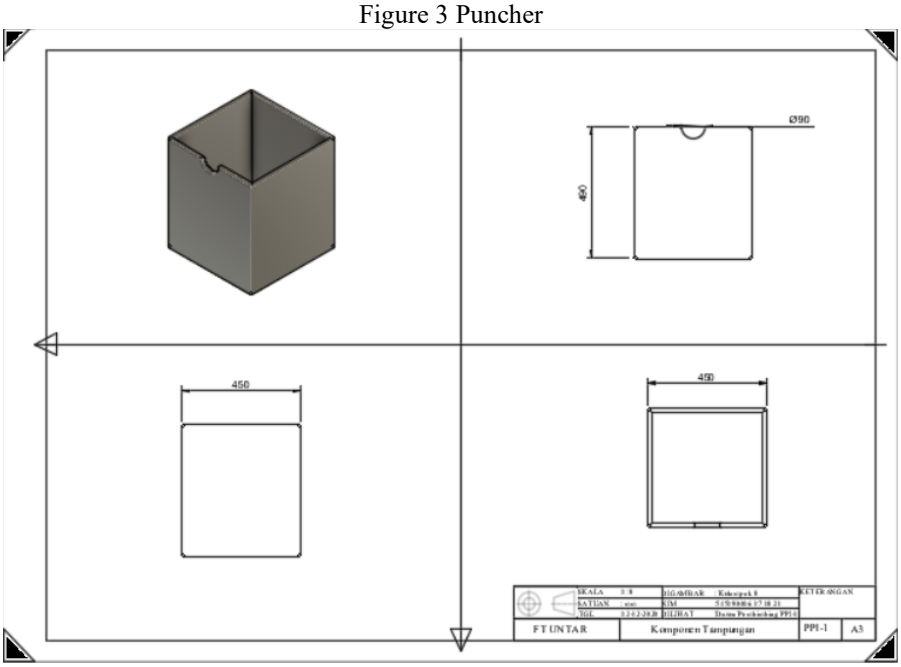

Figure 4 Storage

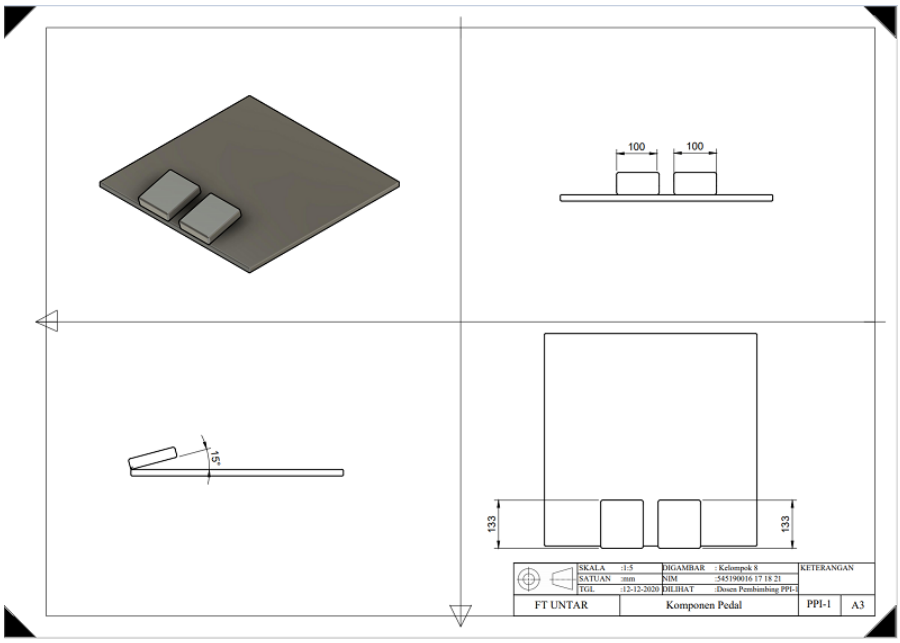

Figure 5 Pedals

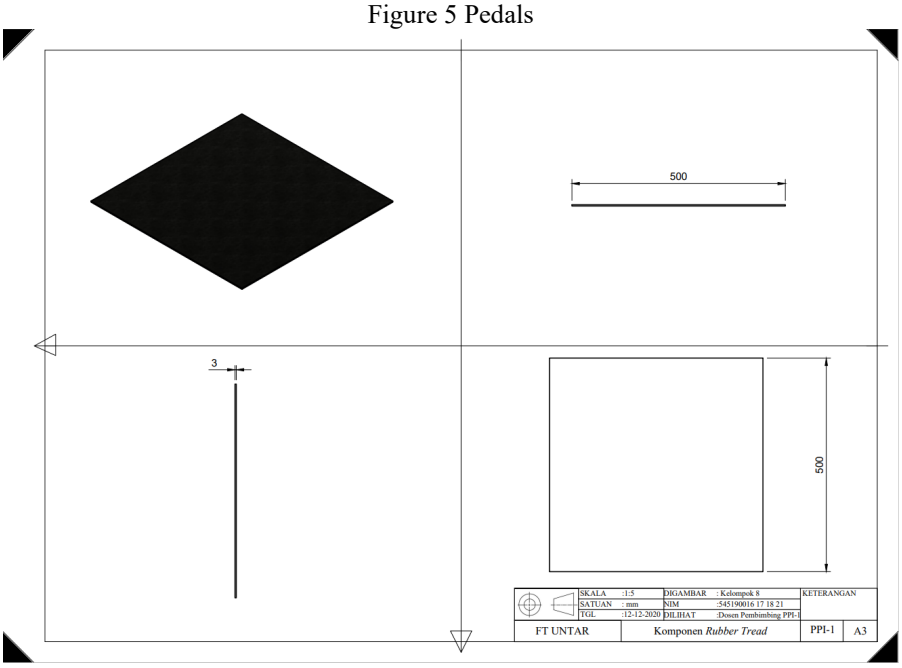

Figure 6 Rubber Tread

6. Conclusion

"Public trash bin for medical mask waste" is ergonomically designed. Based on the anthropometric data for adult Indonesians, both male and female over 17 years old, that can provide comfort to the public as users when using this product. This product is designed to treat and manage the medical mask's waste by changing the mask's shape using a hole puncher. Medical mask waste is also disinfected using two disinfectants provided in the storage box inside the trash bin. Moreover, "Medical Mask Waste Management Trash Bin for Public" is equipped with hand-sanitizers to maintain people's cleanliness and hygiene. Besides, "Medical Mask Waste Management Trash Bin for Public" is designed to maximize and increase the work function of existing trash bins in public, especially for use during a pandemic.

References

Antropometriindonesia.org. Data Antropometri. Available: http://antropometriindonesia.org/index.php/detail/artikel /4/10/data_antropometri, December 10, 2020.

Hardianto, I., *Ergonomi Suatu Pengantar,* PT Remaja Rosdakarya, 2014.

Helander, M., *A Guide to Human Factors and Ergonomics,* 2nd Edition, Taylor & Francis,2006.

Priharto, S., Mengetahui Pentingnya Riset Pemasaran dalam Pengembangan Bisnis. Available: https://accurate.id/bisnis-ukm/pentingnya-riset-pemasaran/, October 26, 2020.

Suryadi,A., and Nurdiana,D., Sistem Pengambilan Keputusan untuk Pemilihan Tekniksi Lab dengan Multi Kriteria Menggunakan Metode AHP (Analytic Hierarchy Process).*Jurnal Pendidikan Matematika*,vol 5, pp. 11-21,2015.

Ulrich, Karl T., and Eppinger, Steven D., *Perancangan dan Pengembangan Produk,*Salemba Teknika,2001

Biographies

Caroline De Candra, Dennis Marchello, Herwin Larsen, and Stevie Joes are Industrial Engineering students of Tarumanagara Universitiy, Jakarta, Indonesia. They are currently developing an eco-friendly and affordable product that useful and compatible during COVID-19 pandemic and new normal situation. The aims of this product are also help public during hard time to adapt in pandemic and to fulfill Industrial Design Project class and to achieve their Industrial Engineering degree. Caroline De Candra and Stevie Joes are a dilligent academic member of Industrial Engineering Student Association known as IMADUTA. Dennis Marchello is an active human-relation member of Engineering Student Representative Council known as DPM-FT and Herwin Larsen is a hardworking member of Buddhist Student Club identified as DHARMAYANA.

Lina Gozali is a lecturer at the Industrial Engineering Department of Universitas Tarumangara since 2006 and a freelance lecturer at Universitas Trisakti since 1995. She graduated with her Bachelor's degree at Trisakti University, Jakarta - Indonesia, then she got her Master's Degree at STIE IBII, Jakarta – Indonesia, and she recently got her Ph.D. at Universiti Teknologi Malaysia, Kuala Lumpur – Malaysia in 2018. Her apprentice college experience was in paper industry at Kertas Bekasi Teguh, shoes industry at PT Jaya Harapan Barutama, and automotive chain drive industry at Federal Superior Chain Manufacturing. She teaches Production System and Supply Chain Management Subjects. She did a research about Indonesian Business Incubator for her Ph.D. She has written almost 70 publications since 2008 in the Industrial Engineering research sector, such as Production Scheduling, Plant Layout, Maintenance, Line Balancing, Supply Chain Management, Production Planning, and Inventory Control. She had worked at PT. Astra Otoparts Tbk before she became a lecturer.

Frans Jusuf Daywin was born in Makasar, Indonesia on 24th November 1942. is a lecturer in the Department of Agricultural Engineering at Faculty of Agricultural Technology Bogor Agricultural University since 1964 conducted teaching, research, and extension work in the field of farm power and machinery and become a professor in Internal Combustion Engine and Farm Power directing and supervising undergraduate and graduate students thesis and dissertation and retired as a professor in 2007. In 1994 up to present as a professor in Internal Combustion Engine and Farm Power at Mechanical Engineering Program Study and Industrial Engineering Program Study Universitas Tarumanagara, directing and supervising undergraduate student's theses in Agricultural Engineering and Food Engineering Desain. In 2016 up to present teaching undergraduate courses of the introduction of concept technology, research methodology, and seminar, writing a scientific paper and scientific communication, and directing and supervising undergraduate student's theses in Industrial Engineering Program Study at the Faculty of Engineering Universitas Tarumanagara. He got his Ir degree in Agricultural Engineering, Bogor Agricultural University Indonesia in 1966, and finished the Master of Science in Agricultural Engineering at the University of Philippines, Los Banos, the Philippines 1981, and got the Doctor in Agricultural Engineering, Bogor Agricultural University Indonesia in 1991. He joined 4-month farm machinery training at ISEKI CO, AOTS, Japan in 1969 and 14 days agricultural engineering training at IRRI, Los Banos the Philippines, in March 1980. He received the honors "SATYA LANCANA KARYA SATYA XXX TAHUN" from the President of the Republic of Indonesia, April 22nd, 2006, and received appreciation as Team Jury from the Government of Indonesia Minister of Industry in Industry Start-Up 2008. He did several research and survey in the field of farm machinery, farm mechanization, agricultural engineering feasibility study in-field performance and cost analysis, land clearing and soil preparation in secondary forest and alang-alang field farm 1966 up to 1998. Up till now he is still doing research in designing food processing engineering in agriculture products. Up to the present he already elaborated as a conceptor of about 20 Indonesia National Standard (SNI) in the field of machinery and equipment. He joins the Professional Societies as a member: Indonesia Society of

Agricultural Engineers (PERTETA); Indonesia Society of Engineers (PII); member of BKM-PII, and member of Majelis Penilai Insinyur Profesional BKM-PII.

Carla Olyvia Doaly is a lecturer in the Industrial Engineering Department at Universitas Tarumanagara graduated with my bachelor's degree from Institut Teknologi Nasional Malang, which study the Industrial Engineering program, then continued my Master Degree at Institut Teknologi Bandung majoring in Industrial engineering and management and a special field of Enterprise Engineering. I am very interested in studying industrial engineering by doing research related to System Design and Engineering, Supply Chain Management, Operations Research and Analysis, Information System Management, Occupational Health and Safety, Facilities Engineering, Quality and Reliability Engineering

Lamto Widodo is a lecturer at Universitas Tarumanagara since 1994, joining the Mechanical Engineering Department. Involved as a team for the opening of the Industrial Engineering Department in 2004-2005. Starting in 2005, as a lecturer in the Industrial Engineering Department. Obtained a Bachelor's degree at the Sepuluh Nopember Institute of Technology Surabaya (ITS), then completed a Master degree at the University of Indonesia (UI) and graduated with the title Dr. at the Bogor Agricultural Institute (IPB). He is engaged in research and publication in the fields of Product Design and Ergonomics, Production Systems and Engineering Economics, and teaches at various universities in Jakarta. Has published nearly 30 publications in the field of Industrial Engineering research both nationally and internationally. Active in various professional organizations, especially in the field of Ergonomics (IEA), as well as active in the organization of the Indonesian Industrial Engineering Higher Education Cooperation Agency (BKSTI).

Adianto was born in Semarang, Indonesia on 29th April, 1955. Adianto completed his "Sarjana Fisika Degree" in 1982 from the Physics Department of the Faculty of Sciences and Mathematics, Gadjah Mada University, Yogyakarta. In 1978 when he got his Bachelor of Science in Physics (B.Sc.) he started working as a Staff of "Field of Nuclear Physics Laboratory"," Pure Materials Research Center and Instrumentation Yogyakarta", Atomic Energy Agency (BATAN). In 1986 to 1993 he received a scholarship from the Ministry of Research and Technology of the Republic of Indonesia to continue his studies in England at the Department of Electronic and Electrical Engineering, University of Salford, England. He received his M.Sc. degree in the field of Computer Instrumentation in 1988 and a Ph.D. degree in the field of Material Science in 1993. He returned back to Indonesia, then in 1994 he moved to Jakarta and appointed as a "Head of Engineering and Advanced Technology", (Echelon IIIA) at "Nuclear Science and Technology Empowerment Center", Atomic Energy Agency, BATAN, Jakarta. In 2000 he was assigned to the Ministry of Research and Technology to serve as Assistant Deputy fpr Science Accreditation and Development Center (Echelon IIA) and in 2005 he was assigned as Assistant Director for Academic Affairs, to Organize Graduate Research in PUSPIPTEK Serpong. In 2008, he took early retirement as a Governmen Official to take a full time lecturer at Universitas Tarumanagara, Jakarta. Adianto started his profession as a lecturer in the Department of Mechanical Engineering, Faculty of Engineering, Tarumanagara University and the Department of Mechanical Engineering, Faculty of Industrial Technology, Trisakti University of Indonesia from 1994 until now. He has taught mathematics, mechatronics, English and physics, but Physics is the main subject he teaches. As a full time lecturer at Universitas tarumanagara, in 2012 he was appointed as a Vice Dean for Academic and Student Affairs, Faculty of Engineering, and in 2016 up to now, he was appointed as a Director for Student Affairs, Universitas Tarumangara. During his profession as a researcher at the Atomic Energy Agency, the Ministry of Research and Technology and as a lecturer at Tarumanagara University, Adianto as an Associate Professor has published scientific and research papers of more than 35 titles at home and abroad.

Ahmad is currently active as a lecture at Industrial Engineering Department, Universitas Tarumanagara. Mr. Ahmad graduated his bachelor's degree of Industrial Engineering at Universitas Islam Indonesia and his master's degree in University of Indonesia. He taught Operation Research and Modeling System.

Lithrone Laricha Salomon is a lecturer at Industrial Engineering Department of Universitas Tarumanagara since 2006. She graduated from Universitas Tarumanagara with a Bachelor's Degree in Mechanical Engineering. She continued her study and got her Master's Degree from Industrial Engineering Program at Universitas Indonesia. She teaches a subject related to quality management system such as Total quality management, Quality Control, Design of Experiment and Industrial Statistic. Besides teaching she also did some research and carrying out a number of community service activities in many places around Indonesia. She has written 40 publication on International and national proceeding and journal since 2007.

Agustinus Purna Irawan was born in Mataram - Musirawas, South Sumatera, August 28, 1971. Is a Lecturer at Universitas Tarumanagara and has served as Chancellor since 2016 until now. Obtained a Bachelor of Mechanical Engineering from the Faculty of Engineering, Gadjah Mada University (1995), a Masters in Mechanical Engineering from the Faculty of Engineering, University of Indonesia (2003), a Doctor of Mechanical Engineering from the Faculty of Engineering, University of Indonesia (2011), Professional Engineer (Ir) Mechanical Engineering from the Faculty of Engineering, Gadjah Mada University (2019) and Professor of Mechanical Engineering from the Ministry of Education and Culture (2014). The fields of scientific research and publication include: Product Design and Development, Strength of Materials, Natural Fiber Composites with implementation in the field of prosthesis and automotive components. Obtaining Research and Community Service Grants for Higher Education / Research and Technology BRIN / Untar / Others ≥ 100 titles; Patents: 7 and still in process: 4; Copyright: 9 books; Textbooks: 6 books; Book Chapter: 2 chapters; Scientific articles ≥ 100 titles. Obtained a Professional Certificate, namely the Educator Certificate, the Intermediate Professional Engineer Certificate (IPM) of the Indonesian Engineers Association (BKM PII) Vocational Engineer Association (BKM PII), and the ASEAN Engineer Certificate (ASEAN Eng.) From the ASEAN Federation Engineering Organizations (AFEO). He is active in education, various scientific activities, the world of business, professional associations, and various social activities. Received several awards: Best Graduate S2 UI GPA 4.00 cum laude (2003); First best Lecturer Kopertis Region III DKI Jakarta (2011); Best Presentation at the Seminar on Research Results of the Centralized Program, PUPT Dikti (2014); Honorary Member of The ASEAN Federation of Engineering Organizations, AFEO (2018); Best PTS Chancellor for the Academic Leader Award Program (2019).