Desideratum Design of Remotely Piloted Aircraft (RPA) Application in Natural Disaster Management

Ardjie Matawaran and Marvin I. Noroña
School of Industrial Engineering and Engineering Management
Mapúa University, Manila, Philippines
arjie.matawaran@yahoo.com, minorona@yahoo.com

Abstract

Typhoon Haiyan was the most devastating tropical cyclone that hit the Philippines recorded in the history. With climate change and technological developments, regular conducting of research and technology improvement will add to more innovative and adaptive mechanisms and approaches towards disaster management of our local government. The study aims to answer on how RPA does will be appropriate to use for the needs of LGUs in Metro Manila on their Natural Disaster Management. This study focusses on integrating the voice LGU requirements in Metro Manila into a preliminary design of RPA with high levels of customer satisfaction. Need analysis result was NDRRMOs in Metro Manila needs a tool that can support four thematic phases on their natural disaster management for them able to be timely response, provide real time information and lesser risk for the rescuers. Two preliminary designs were produced from the result of needs analysis, QFD, correlation of pre-requisites of target customers, benchmarking in current practices in other Asian countries and decision analysis. Policy Paper was established to develop a proposal of Government Agency responsibilities in using RPAs and integrate its use in four thematic phases in natural disaster management of the LGUs in Metro Manila. This study will be used on the improvement and performance of LGUs and other government agencies on their assessment and response capabilities with the innovative RPAs for Natural Disaster Management in Metro Manila.

Keywords
Remotely Piloted Aircraft, Natural Disaster Management, Desideratum design

1. Introduction

According to Dimatatac (2012), the proneness of the Philippine archipelago to hazards is defined by its location and natural attributes. It is situated in the Pacific Ring of Fire, where two major tectonic plates, the Philippine Sea and Eurasian meet. This explains the occurrence of earthquakes and tsunamis, and the existence of around 300 volcanoes of which 22 are classified as active because their eruptions have been found in historical records. The Philippines is located along the typhoon belt on the Western North Pacific Basin where 66% of tropical cyclones enter or originate. The eastern seaboard is highly exposed to tropical cyclones with wind speeds greater than 150km/hr. Mean annual rainfall in the country varies from 965 mm to 4,064 mm. Extreme rainfall events trigger landslides and lahar flows and are responsible for severe floods in low lying areas. Meanwhile, tropical cyclones are responsible for an average of 40% of the annual rainfall in the country. Slow-moving or almost stationary tropical cyclones account for extended periods of rainfall. With double exposure to seismic events and hydro-climatic hazards, the Philippines is one of the areas on earth which is exposed the most to natural and man-made disasters like 15-25 tropical cyclones or storms in a year (Boyer & Grünewald, 2013). Due to this condition, the Philippines has been in the top 20 recipients of humanitarian assistance in just one of the last ten years.

One of the deadliest storms was Typhoon Haiyan (Yolanda) which became the strongest landfalling tropical cyclone ever recorded as it crossed the central Philippines on November 7-8, 2013, and caused 6,241 demises. The slow pace of relief goods in the Philippines after typhoons results in failure of delivery and rotten goods. According to the Report on the audit of the typhoon Yolanda relief operations by the Commission on Audit (2014), government employees encountered procurement and contracting issues causing delays of goods. Delivering the stocks of bottled water to the

DSWD warehouses at NCR or affected areas immediately was not possible due to lack of storage space at NROC, lack of delivery vehicles or trucks to transport these to all affected areas occurrence of obstruction in the main road, and congestion at the port of Matnog, Sorsogon or even in some areas in Regions VI and VII as cargo vessels could not move out of the ports due to long queues of cargo trucks, passenger buses, and private vehicles rushing to go to the affected areas. In the case of DSWD Field Office (FO) VI, the system they adopted in relief distribution did not provide daily and periodic reporting on the results/status of its operations as well as an accounting of funds received and its utilization. Hence, the Philippine Government should take action to be more efficient in dealing with disasters.

The Philippine Aerospace Development Corporation (PADC) is a Government-owned and Controlled Corporation (GOCC) that should undertake all manner of activity, business, or development projects for the establishment of a reliable aviation and aerospace industry that shall include but not be limited to the design, assembly, manufacture and sale of all forms of aircraft and aviation or aerospace devices, equipment or contraptions, and the studies or researches for innovations and improvement thereon. PADC is currently in the momentum of developing new capabilities that will spearhead innovations in the aviation industry in the Philippines. Unmanned Aircraft Vehicle (UAV) is now truly the solution for the dull, dirty, and dangerous tasks for which they were initially proposed and one of them is humanitarian operations. UAVs are the key to timely response, real-time information, and lesser risk during disaster operations. However, the use of RPAs in local government units in the Philippines were still not emerging. Innovations in the National Disaster Risk Reduction and Management Council (NDRRMC) particularly in using an aerial drone were still not implemented specially on their operations.

This research study aims to answer the question will RPA be appropriate to use for the needs of LGUs in Metro Manila on their Natural Disaster Management. In addition, this research study attempts to determine the requisites of LGUs in Metro Manila that will warrant the usage of RPAs for Natural Disaster Management purposes, that previous studies failed to cover in the study of the same subject. Given this information, the following are the objectives for this study accordingly:

1. To define LGUs major requisites in using RPAs on Natural Disaster Management in Metro Manila with perceived benefits for them on where it will be used.
2. To provide a preliminary design of RPA suited for Natural Disaster Management in Metro Manila.
3. To develop a proposal of Government Agency responsibilities in using RPAs and integrate its use in mitigation, preparing, response and recovery phase of the LGUs in Metro Manila.

This study will also be used on the improvement and performance of LGUs and other government agencies on their assessment and response capabilities with the innovative RPAs for Natural Disaster Management in Metro Manila. Moreover, this study will spearhead also the design, assembly and manufacturing of UAVs also known as RPAs in the Philippines through PADC. This study focused on integrating the voice LGU requirements in Metro Manila and the voice of professionals in UAV industry into a preliminary design of RPA with high levels of customer satisfaction. The preliminary design phase includes a comprehensive definition of the design with its payloads, weight, speed range and dimensions. The UAV laws, financial analysis and more detailed analysis of the aerodynamics, dynamics, engine systems, structures and ancillary systems of the RPA and of the layout and the mechanical, electronic and environmental systems of the control station and any other sub-systems such as the launch and recovery systems are not included on this study. The NDRRMC and DSWD, who's responsible for ensuring the safety and wellbeing of the civilians during disasters or emergencies, was interviewed to gather genuine information of current Natural Disaster Management in Metro Manila.

2. Methodology

Figure 2.1 shows the sequence of the methodological steps of the whole study. Anecdotal records were used as information to summarize a single developmental incident after it occurs. A descriptive method was used to gather quantifiable information that can be used for statistical inference on the researcher target respondents through data analysis and describe the applicability of RPAs to natural disaster management in Metro Manila through interview and survey. The respondents of this study are consists of the LGUs from the city of Caloocan, Las Piñas, Makati, Malabon, Mandaluyong, Manila, Marikina, Muntinlupa, Navotas, Parañaque, Pasay, Pasig, Quezon, San Juan, Taguig,

Valenzuela, and Pateros which are members of League of Cities in the Philippines (LCP), a representative from DSWD and NDRRMC in Metro Manila, and UAV Professionals. They are the ones who are knowledgeable enough to answer the problems posed in this study.

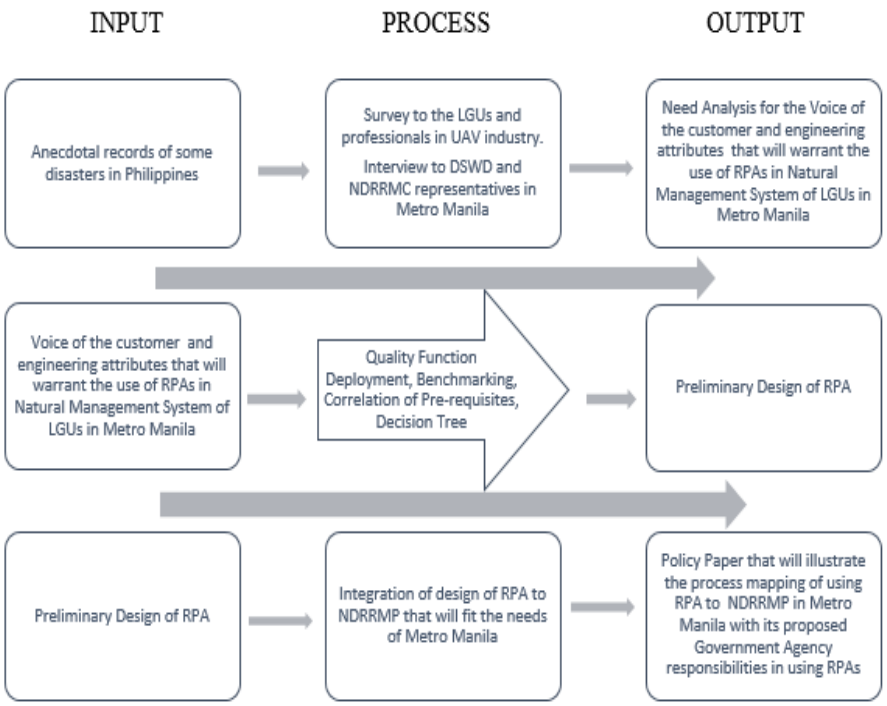

Figure 2.1 Research Framework

3. Results and Discussion

3.1 Anecdotal record

The Philippines is most susceptible to typhoons however, volcanoes, floods, landslides, earthquakes, and tsunamis are also serious risks. Based on figure 3.1.1 shown below, for the last 15 years (1990 – 2014), 314 (51.3%) of all recorded disasters are due to tropical storms. This is followed by 136 counts of flooding (31.9%), 34 landslides (6.4%), 25 volcanic eruptions (4.6%), and 20 earthquakes with 4.1 percent (EM-DAT, 2015).

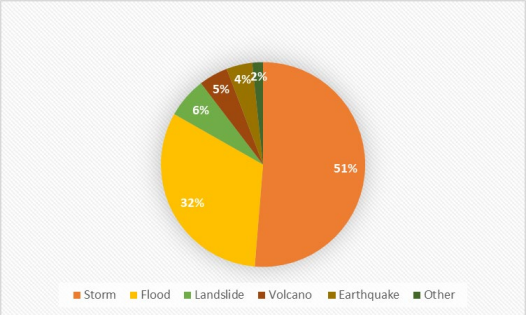

Fig. 3.1.1 Frequency of natural disaster in Philippines 1990-2014

3.2 Needs Analysis

NDRRMOs in Metro Manila need a tool that can support four thematic phases on their natural disaster management for them to have a timely response, provide real-time information, and lesser risk for the rescuers. Needs analysis survey result was flood, earthquake, and storms are the top 3 natural disasters that need the use of RPA in Metro Manila. Payload prerequisites of user based on the result of survey and interview for an RPA to use in Metro Manila on their natural disaster management must be equipped with a camera system and sensor system which can support pre-disaster and post-disaster activities.

Survey results were 79% moderately, and 21% highly need to use RPA in Metro Manila as support during pre-disaster management and supporting disaster management activities but, 100% highly need of RPA during post-disaster activities in Metro Manila.

The use of RPA is more prominent during the recovery and response phase in natural disaster management. Accuracy of information and correct timing during search and rescue is tremendously critical. RPA can be a tool for assessing the status of nearby dams and damages for a quick assessment recovery, a tool for aerial video to understand the impact of natural disaster and help the decision-maker to take action immediately, a tool to bridge communication in the area at risk where part of communication infrastructure is destroyed due to natural disasters such as earthquake and floods and as a tool to assist disaster responders to achieve their goal quickly scanning large disaster area in the sky and identify potential victims with the help of onboard cameras. The capabilities of RPA can save more human lives at risk and accurate information to the decision-makers on what immediate actions must be done.

Target customers response summary was 64% moderately and 29% highly need of RPA to use reducing costs and accelerate the deliveries of goods and medicines to the survivors after a disaster and 79% moderately and 21% highly need on integrating the use of RPA in Natural Disaster Risk Reduction Management Plan for 2011 – 2018 and procurement of RPAs for LGUs in Metro Manila which can play a critical role on their natural disaster management.

It would be helpful if LGUs, DSWD, and NDRRMC will receive education, training, and understanding regarding RPAs which will reduce the wrong perception and danger observations related to RPAs operations.

3.3 Quality Function Deployment

After identifying the needs of LGUs in Metro Manila, the preparation of QFD started. Iqbal et al. (2009) cited the components of QFD and used them as a guideline in making a preliminary design of RPA. Classification of RPAs was used as the basis for categorizing common UAV platforms based on flying height, size, and endurance by Ameri et al. (2009) which can give directions on integrating the QFD result to preliminary design.

Voice of the customer (VOC) was used to describe the top to bottom prerequisites of LGUs in Metro Manila derived from the result of the survey result as shown in Table 3.3.1 It inputted important outputs and benefits for product development of RPA which was used for setting appropriate preliminary design specifications. Table 3.3.2 shows the negative coefficient shows a strong inverse correlation and the positive coefficient indicates a strong direct connection between the set of pre-requisites which implies the level of need of the customer on the use of RPAs regarding its capabilities. Figure 3.3.1 show that engineering attributes were used to describe the set of parameters that help meet the VOC requirements satisfactorily. Payload capacity will depend on the type and size of the RPA. It will determine the suitable equipment it can carry and the type of data that can be collected. Larger RPAs can be built-in with several different tools including more than one camera, cargo, communication relay technology, and more. The researcher chooses three (3) current companies who operate UAVs in the Philippines and current Practice in other Asian countries for benchmarking.

Table 3.3.1 List of Pre-requisites for House of Quality (HOQ)

P1	Capable to determine state of dams
P2	Capable to assess damages for a quick assessment recovery
P3	Capable to produce aerial video
P4	Capable to bridge communication when communication infrastructure is destroyed
P5	Equipped with camera
P6	Capable to support pre disaster activity
P7	Capable to support disaster management activities during time of disaster
P8	Capable to support disaster management activities during post disaster
P9	Capable to reduce costs and accelerate delivery of goods after a disaster

Table 3.3.2 Correlation of Pre-requisites

	P1	*P2*	*P3*	*P4*	*P5*	*P6*	*P7*	*P8*	*P9*
P1	1.00								
P2	0.02	1.00							
P3	0.36	-0.21	1.00						
P4	0.00	0.00	0.00	1.00					
P5	0.00	0.00	0.00	0.00	1.00				
P6	0.00	0.00	0.00	0.00	0.00	1.00			
P7	-0.25	0.53	-0.44	0.00	0.00	0.00	1.00		
P8	0.00	0.00	0.00	0.00	0.00	0.00	0.00	1.00	
P9	0.27	0.01	-0.04	0.00	0.00	0.00	0.10	0.00	1.00

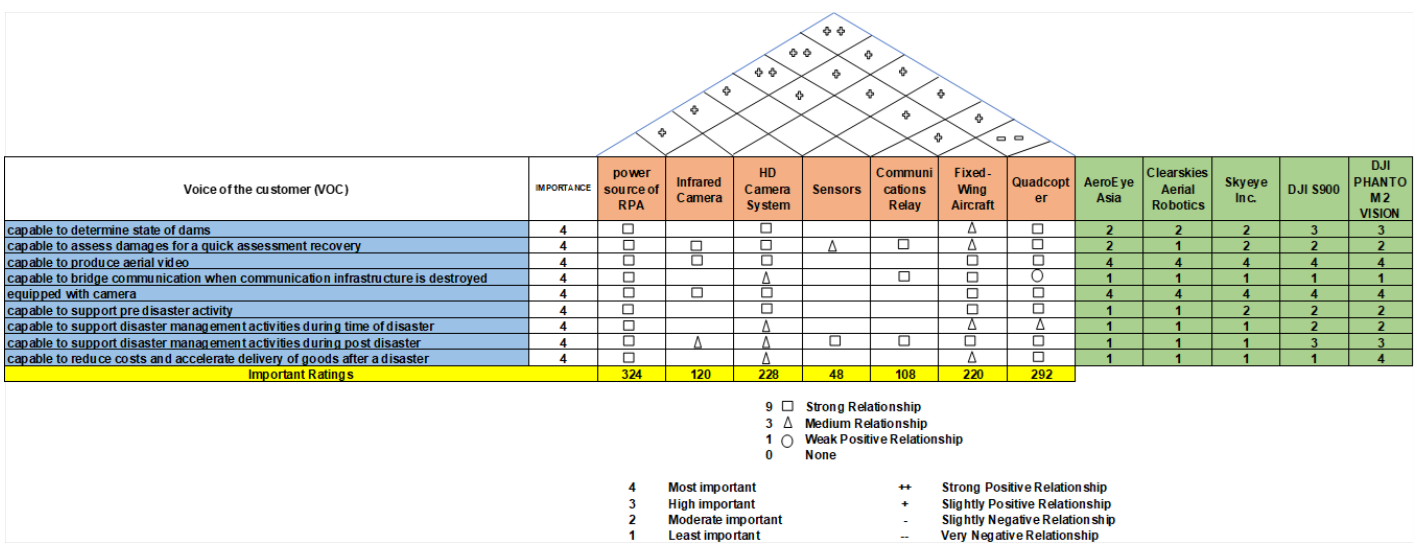

Voice of the customer (VOC)	IMPORTANCE	power source of RPA	Infrared Camera	HD Camera System	Sensors	Communications Relay	Fixed-Wing Aircraft	Quadcopter	AeroEye Asia	Clearskies Aerial Robotics	Skyeye Inc.	DJI S900	DJI PHANTOM 2 VISION
capable to determine state of dams	4	□		□			△	□	2	2	2	3	3
capable to assess damages for a quick assessment recovery	4	□	□	□	△	□	△	□	2	1	2	2	2
capable to produce aerial video	4	□	□	□			□	□	4	4	4	4	4
capable to bridge communication when communication infrastructure is destroyed	4	□		△		□	□	○	1	1	1	1	1
equipped with camera	4	□	□	□			□	□	4	4	4	4	4
capable to support pre disaster activity	4	□		□			□	□	1	1	2	2	2
capable to support disaster management activities during time of disaster	4	□		△			△	△	1	1	1	2	2
capable to support disaster management activities during post disaster	4	□	△	△	□	□	□	□	1	1	1	3	3
capable to reduce costs and accelerate delivery of goods after a disaster	4	□		△			△	□	1	1	1	1	4
Important Ratings		324	120	228	48	108	220	292					

9 □ Strong Relationship
3 △ Medium Relationship
1 ○ Weak Positive Relationship
0 None

4 Most important
3 High important
2 Moderate important
1 Least important

++ Strong Positive Relationship
+ Slightly Positive Relationship
- Slightly Negative Relationship
-- Very Negative Relationship

Figure 3.3.1 House of Quality result show high importance rating on power source of and RPA, HD camera system and Quadcopter compared to Fixed wing type of aircraft.

3.4 Decision Tree Analysis

Decision Tree Analysis was used to show possible consequences per criteria regarding important factors needed in designing the phase of RPA to meet the pre-requisites of the target customer. Decision analysis was conducted to know how Quadcopter RPA and Fixed Wing RPA can support disaster prevention and mitigation, preparedness, response, rehabilitation, and recovery. The decision analysis result was Quadcopter RPA can fly at night powered by rechargeable batteries, equipped with infrared and HD camera system, has an endurance of one to two hours flight with a radius of action of five to ten kilometer in close range surveillance. Another Decision analysis result was Fixed Wing RPA can flight at night powered by rechargeable batteries, equipped with infrared and HD camera system, has an endurance of less than 24 hours flight with a radius of action of ten to fifty kilometer in long-range surveillance.

Solar power may not be reliable for natural disaster operations as it depends on the weather, time of day, and many other factors. Good endurance, range, and speedy response are essential for search and rescue. Timely response enhances the chances of survival of people that is why it is better to consider timely response but less capacity to supply the affected areas during a disaster than payload that will able the RPA to carry more goods in supplying the affected areas during a disaster.

3.5 Preliminary Design of RPA

Two preliminary designs were produced from QFD, current practice in other Asian countries, correlation of pre-requisites, and decision tree analysis. The researcher focused more on the Tactical and Mini category of UAVs which are the best suitable for the needs of LGUs in Metro during a disaster. These 2 designs of RPAs can transmit high-quality images and video securely and reliably to numerous locations, giving the decision maker's information and real-image that greatly enhances situational awareness in a disaster.

Figure 3.5.1 Preliminary design 1 RPA category is Tactical. Design 1 has an endurance of 20 hours of flight time with a radius of action of 20 kilometers in long range surveillance. Its design extracted from the result of QFD will provide solution on some pre-requisites of target customers; Capable to produce aerial video, Capable to bridge communication when communication infrastructure is destroyed, equipped with a camera, Capable to support pre-disaster activity, Capable to support disaster management activities during a time of disaster and Capable to support disaster management activities during post-disaster. Design 1 was designed to use during 4 thematic phases in natural disaster management. It is more focused on long range surveillance with its camera system. Its capability to bridge communication when communication infrastructure is destroyed will require more payload.

Figure 3.5.2 Preliminary design 2 RPA category is Mini. Design 2 has an endurance of 2 hours of flight time with a radius of action of 10 kilometers in close range surveillance. Its design extracted from the result of QFD will provide solution on some pre-requisites of target customers; Capable to determine the state of dams, Capable to assess damages for a quick assessment recovery, Capable to produce aerial video, Equipped with a camera, Capable to support pre-disaster activity, Capable to support disaster management activities during a time of the disaster, Capable to support disaster management activities during post-disaster and Capable to reduce costs and accelerate delivery of goods after a disaster. Design 2 was designed to use during 4 thematic phases in natural disaster management. It is more focused on close-range activities with its camera system and ability to carry loads like medicine and food.

Those designs have built-in sensors to prevent collisions with the ground & other obstacles. UAV professionals suggest during a survey that solar power may not be reliable for natural disaster operations as it depends on the weather, time of day, and many other factors.

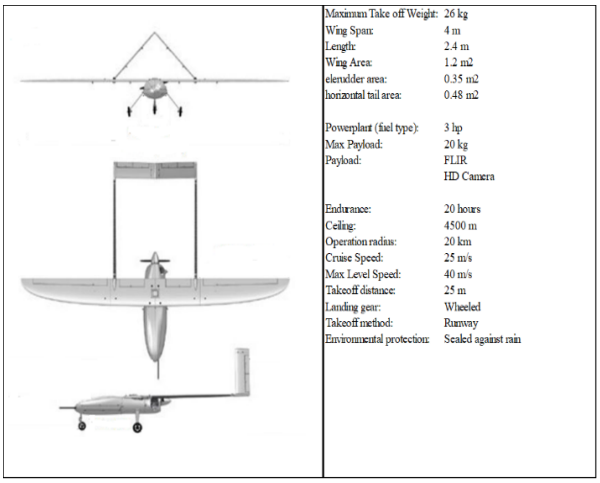

Figure 3.5.1 Preliminary Design 1 of Fixed Wing Remotely Piloted Aircraft

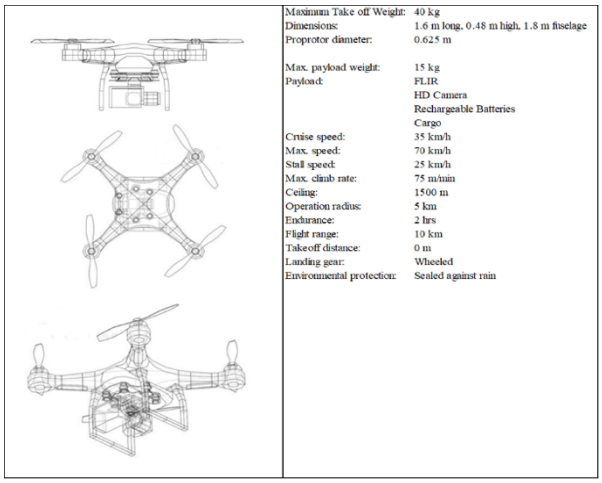

Figure 3.5.2 Preliminary Design 2 of Quadcopter Remotely Piloted Aircraft

3.6 Limitations

The range of UAVs is also increasing as their battery life is getting better but small UAVs cannot travel to a distance exceeding 40 kilometers. While RPAs can sustain high-speed winds, they cannot be used during a storm or a hurricane. Communication relay technology will require a large payload and play its role during complex operations. Financial analysis, detailed analysis of the aerodynamics, engine systems, structures, and ancillary systems of the RPA and of the layout and the mechanical, electronic, and environmental systems of the control station and any other sub-systems such as the launch and recovery systems are not the part scope of the study.

3.7 Policy Paper Summary

Table 3.7.1 shows that the two preliminary designs of RPA that were used for making policy paper which includes the integration of using RPAs in natural disaster management in Metro Manila and proposed government agency responsibilities in using RPAs. NDRRMP was used as the guidelines for the policy paper which might enhance the efficiency of the decision-makers before and after a disaster. The researcher made a proposed solution on how will the involved government agencies will use the RPAs was provided also to attain the goals of NDRRMP and helps to improve also the current state of procedures and humanitarian operations of all DRRMO.

Table 3.7.1 Policy Paper Summary

Introduction	Clarifying the Problem	Government Approach	Proposed Solution

Machineries of NDRRMC/DRRMOs cannot meet the demand of our citizens when natural disaster strikes.	The preparation of previous administration did not withstand the destruction of the typhoon Yolanda. Delivery of goods were failed, high number of victims and rescue personnel were killed by the typhoon due to lack and inefficient equipment suited for humanitarian operations.	NDRRMC is responsible for ensuring the protection and welfare of the people during disasters or emergencies. National Disaster Risk Reduction and Management Plan 2011-2028 was established to achieve the requirement of Republic Act 10121 which provides the legal basis for policies, plans and programs to deal with disasters.	Integration of Preliminary Designs of RPA to unaccomplished/ for improvement in NDRRMP and Proposed Government Agency responsibilities in using RPAs

3.8 Synthesis

Our first objective of this study is to define LGUs' major requisites in using RPAs on Natural Disaster Management in Metro Manila with perceived benefits for them on where it will be used which was verified on our need analysis result wherein nine requisites were identified. Correlation, QFD, and Decision Tree Analysis have been used to propose two preliminary designs of RPA suited for Natural Disaster Management in Metro Manila which is our second objective in this study. A correlation was used to check the inverse and direct correlation of pre-requisites, QFD was used to reveal the voice of the customer, engineering attributes and practices of other Asian countries in using RPAs, and Decision Tree analysis shows the significance per criteria. Tactical Fixed Wing and Mini Quadcopter designs were made. Preliminary designs of those RPAs were shown but other designers will drive the final design wherein detailed analysis of aerodynamics, financial analysis, engine system, mechanical and electronic systems will be computed and assessed.

Policy Paper has been created to give a solution on our third objective on this study which is to develop a proposal of Government Agency responsibilities in using RPAs and integrate its use in the mitigation, preparing a response, and recovery phase of the LGUs in Metro Manila.

4. Conclusion

From the synthesis of results and discussion, we answered the research problem RPA can be appropriate to use for the needs of LGUs in Metro Manila on their Natural Disaster Management. This paper suggests using RPA to provide improvement in the current state-of-the-art in each of the municipalities in Metro Manila. The decision-makers during a disaster require data in a timely, accurate, and convenient approach to decrease its damage and casualties. Surveillance of natural disaster zones using manned helicopters and airplanes is slow and limited by human endurance and physiological needs. An RPA will operate at a fraction of the cost of manned aircraft and give more endurance and persistent surveillance. Being resilient of the constituents in our municipality is not enough, RPA will increase the innovation in humanitarian operations of DRRMOs in Metro Manila. Logistic RPA's that can supply goods are not yet well matured but still can be considered. This solution will drastically change the information space of decision-makers and help to save more human lives. However, the procurement of this kind of technology in the Philippines should follow the Government Procurement Reform Act, Republic Act 9184.

5. Recommendation

Laws for UAVs are still in argument internationally but the Local Civil Aviation Authority has the capability to implement its rules and regulation just like what other countries do which was not discussed in this study. Certain categories of civilian aircraft are also exempt from complying with the European Aviation Safety Agency (EASA)

Regulation. UAV of mass greater than 150 kg which is not experimental or a 'State Aircraft' will be required to have an EASA airworthiness certificate (Reg Austin, 2011). Those aircraft, including UAVs, which are exempt from EASA regulation must, instead, comply with their national regulations for airworthiness certification and continuing airworthiness and their equipment, personnel licensing operation within aerodromes, and compliance with air traffic must comply with national regulations. Government or military use of UAVs/RPAs intended for natural disaster activities is not yet part of PART 11 Aerial Work and Operating Limitations for Non-Type Certificated Aircraft manual and continuation of deeper analysis related to financial analysis, detailed analysis of the aerodynamics, engine systems, structures and ancillary systems of the RPA and of the layout and the mechanical, electronic and environmental systems of the control station and any other sub-systems such as the launch and recovery systems which the researcher recommends that other researcher must look into in coordination for their next study.

References

Commission on Audit. (2014). Report on the Audit of Typhoon Yolanda Relief Operations. Retrieved from https://www.coa.gov.ph/phocadownloadpap/userupload/DRRM/Yolanda_Report.pdf

Dimatatac, A., Ferrer, J., Ogami, S., and Salbaburo, F. (2012). Philippine Natural Disaster Hotspots. http://aavadisasterriskprofile.blogspot.com/

EM-DAT. (2015). DAT: The international disasters database. Retrieved December 23, 2020, from https://www.emdat.be/

Grünewald, F., & Boyer, B. (2013, November 01). Lessons Learned on Typhoons in the Philippines. Retrieved December 23, 2020, from https://www.alnap.org/help-library/lessons-learned-on-typhoons-in-the-philippines

Iqbal, L., and Sullivan, J. (January 2009). Comprehensive Aircraft Preliminary Design Methodology Applied to the Design of MALE UAV. 47th AIAA Aerospace Sciences Meeting.

NDRRMC. (n.d.). National Disaster Risk Reduction and Management Plan (NDRRMP) 2011-2028. Retrieved Civil Aviation Authority of the Philippines. (n.d.). PART 11 Aerial Work and Operating Limitations for Non-Type Certificated Aircraft. Retrieved December 23, 2020, from https://caap.gov.ph/wp-content/uploads/dlm_uploads/2020/01/PART-11-Aerial-Work-and-Operating-Limitations-for-Non-Type-Certificated-Aircraft.pdf

NWRB. (n.d.). REPUBLIC ACT NO. 7160 - Local Government Code of 1991. Retrieved December 23, 2020, from http://www.nwrb.gov.ph/images/laws/RA_7160LGC.pdf

Biographies

Ardjie Matawaran is a holder of MS Engineering Management and BS Aeronautical Engineering degrees, affiliated with Asurion Techlog Phils. as Supply Planning Chain strategy specialist with research interest in product design, emerging technologies and disaster reduction and management.

Marvin I. Noroña is an Industrial Engineering professor at the Mapua University, School of Industrial Engineering & Engineering Management and School of Graduate Studies. He earned his BS Industrial Engineering and MBA degrees from University of the Philippines and is a Doctor in Business Administration candidate finishing his thesis in lean and green manufacturing at the De La Salle University. His research interests are in the areas of sustainability, supply chain management, production & operation management, lean manufacturing, quality management and smart manufacturing.